Masport HEATING

LOGFIRE

nectre

Flue Kits & Accessories

MADE FOR HOMES IN NEW ZEALAND

NEW ZEALAND MADE

Masport
HEATING
LOGAIRE
nectre

Contents

Insert Flue Kit	4
Free Standing Flue Kit	5
Zero Clearance Flue Kit	9
Drop Box	10
Opti Flue Kit	11
Opti Angle Flue Kit	12
Flue Pipe Casing	13
Ceiling Plates	14
Cowls	16
Flue Kit Guide	17

GDFLU001M

Chimney Flue Kit 150mm

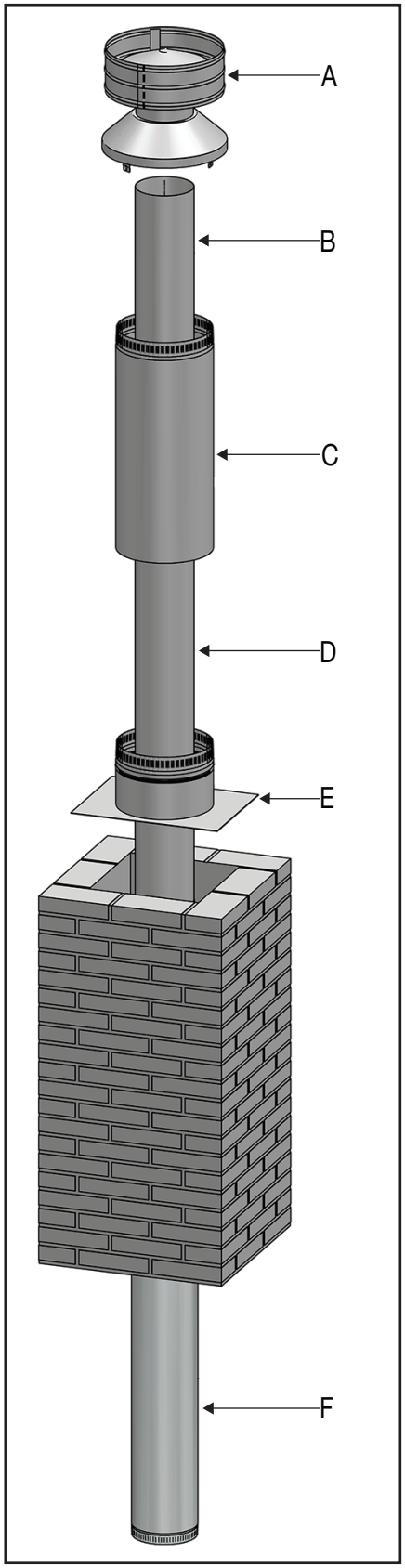

A	1 X 150 Anti Down Draft Combination	**951916**
B	1 X Flue 150mm x 600mm - 50mm to Swage, SS	**951208**
C	1 X Flue Outer Shield-250x600-Galv.	**951284**
D	2 X Flue 150 x 1200 -50mm to Swage- SS	**951200**
F	1 X Flue 150 x 1219 -38mm to Swage - SS	**951251**
	150mm Chimney Flue Kit Install Instruction	**591216**
E	1 X Chimney Flashing (Optional extra, order separately)	
	1 X Chimney Flashing Plate – Galv.	**951911**
	1 X Chimney Flashing Plate – SS.	**951912**

This flue kit has been tested and complies to AS/NZS 2918:2001, Appendix F test.

GDFLU012M

Free Standing Flue Kit 150 With Combination Cowl

(With 1200mm Long Outer Slip Extension & 1200mm Long Double Flue Shield)

ROOF TERMINATION KIT 951909

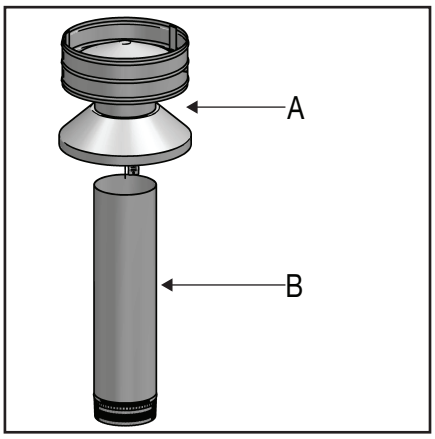

A	1 X 150 Anti Down Draft Combination	**951916**
B	1 X Flue 150mm x 600mm - 50mm to Swage, SS	**951208**
C	1 X Outer Shield Case - 1200mm OD 253mm	**951222**
D	1 X Flue 150 x 1200 -50mm to Swage- SS	**951200**
E	1 X Comb. Casing - 200/250/1200, Galv	**951903**
F	1 X Ceiling Plate 345 x 345mm SS	**951515**
G	1 X MFI Flue Shield Top Bracket	**MFI00097**
H	1 X DD Double Flue Shield 1200mm	**MFIAC091**
I	2 X FLUE 150 x 1200 - S/S - VHT	**951252V02**
J	1 X MFI Flue Shield Bottom Bracket (Convection)	**MFI00098**
K	1 X MFI Flue Shield Bottom Bracket (Radiant)	**MFI00099**
	4 X Ceiling Plate Ceramic Spacers	**551207**
	4 X Screw 10GX1-1/2" PAN POZI ZP	**521651**
	Flue Shield Installation Instruction	**MFI00739**
	150 4.2m Free Standing Install Instruction	**591224**

STARTER PACK 951908

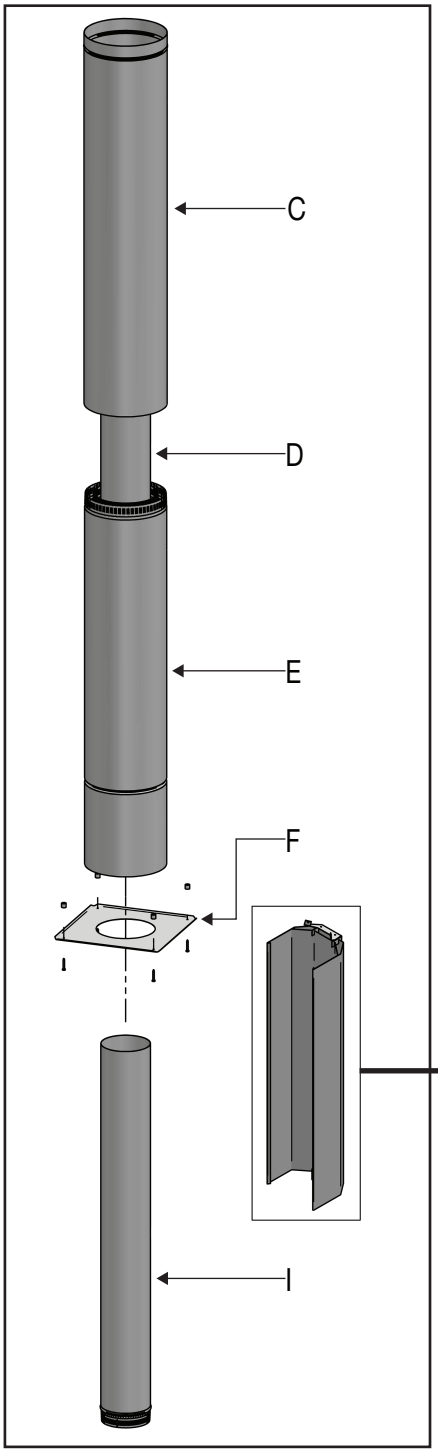

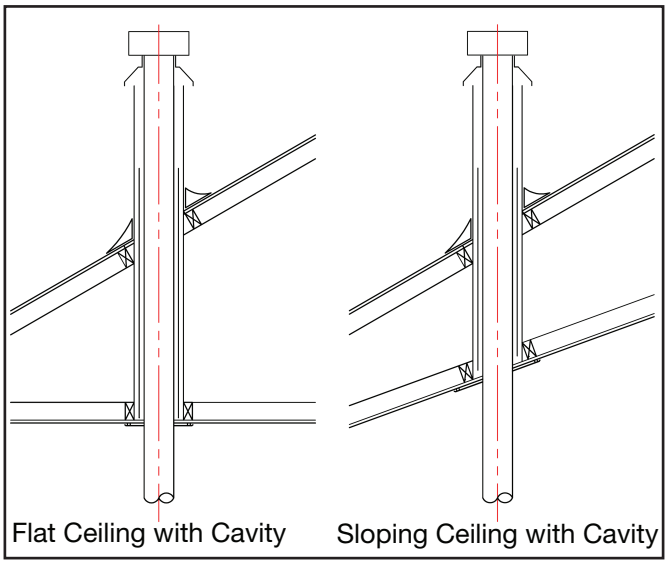

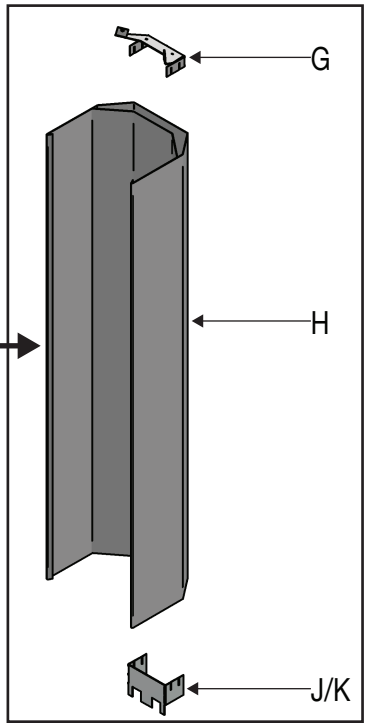

This flue kit has been tested and complies to AS/NZS 2918:2001, Appendix F test.

GDFLU013M

Free Standing Flue Kit 150 With Combination Cowl

(with 1200mm long Outer Slip Extension & 900mm Long Double Flue Shield)

ROOF TERMINATION KIT 951909

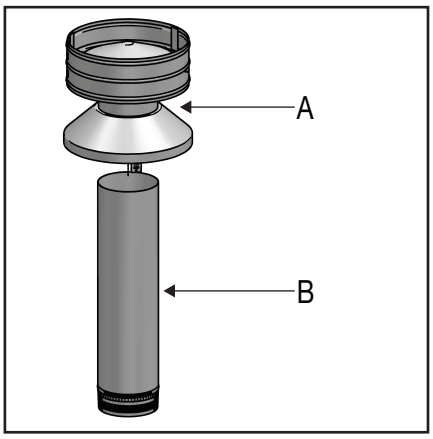

STARTER PACK 951910

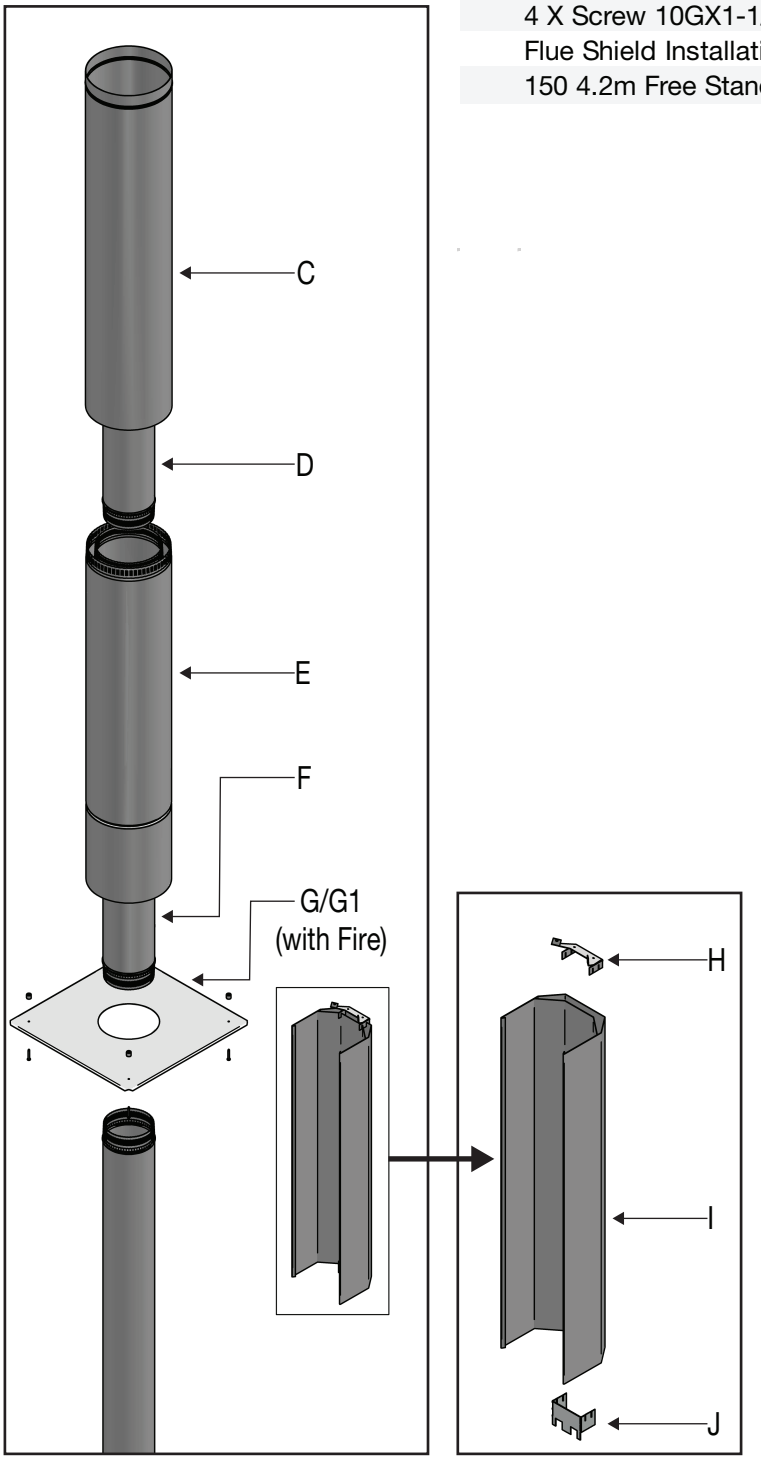

A	1 X 150 Anti Down Draft Combination	**951916**
B	1 X Flue 150mm x 600mm - 50mm to Swage, SS	**951208**
C	1 X Outer Shield Case - 1200mm OD 253mm	**951222**
D	1 X Flue 150 x 1200 -50mm to Swage- SS	**951200**
E	1 X Comb. Casing - 200/250/1200, Galv.	**951903**
F	2 X Flue 150 x 1200 - S/S - VHT	**951252V02**
G	1 X Ceiling Plate 504X504 SS (supplied with fire) OR	**983585**
G1	1 X Ceiling Plate 345X345 SS (supplied with fire)	**951515**
H	1 X MFI Flue Shield Top Bracket	**MFI00097**
I	1 X DD Double Flue Shield 900mm	**983981**
J	1 X MFI Flue Shield Bottom Bracket	**MFI00099**
	4 X Ceiling Plate Ceramic Spacers	**551207**
	4 X Screw 10GX1-1/2" PAN POZI ZP	**521651**
	Flue Shield Installation Instruction	**MFI00739**
	150 4.2m Free Standing Install Instruction	**591224**

This flue kit has been tested and complies to AS/NZS 2918:2001, Appendix F test.

GDFLU018M

Free Standing Flue Kit 150 With Combination Cowl

(With 1200mm Long Outer Slip Extension & 600mm Long Deeper Double Flue Shield)

ROOF TERMINATION KIT 951922

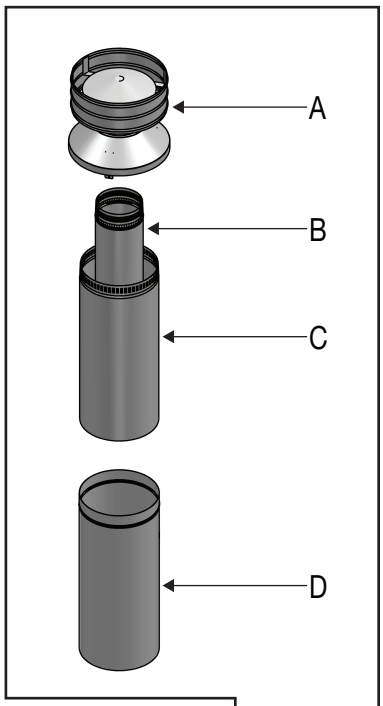

A	1 X 150 Anti Down Draft Combination Cowl	**951916**
B	1 X Flue 150mm x 405mm - 50mm to Swage, SS	**951204**
C	1 X Flue Outer Shield 250mm x 600mm, Galv.	**951203**
D	1 X Outer Slip Casing 253mm x 1200mm, Galv.	**951205**
E	2 X Flue 150mm x 1200mm - 50mm to Swage, SS	**951200**
F	1 X Flue Comb. Casing -200/250/1200, Galv	**951903**
G	1 X Ceiling Plate 150mm (345x345), SS	**951515**
H	1 X Flue 150mm x 1200mm, SS - VHT	**951252V02**
I	1 X MFI Double Flue Shield Top Bracket	**MFI00097**
J	1 X DD Double Flue Shield 600mm	**998628**
K	1 X MFI Double Flue Shield Bottom Bracket	**998763**
	4 X Ceiling Plate Ceramic Spacers	**551207**
	4 X SCREW 10GX1-1/2" PAN POZI ZP	**521651**
	Flue Shield Installation Instruction	**MFI00739**
	150 4.2m Free Standing Install Instruction	**591215**

STARTER PACK 951902

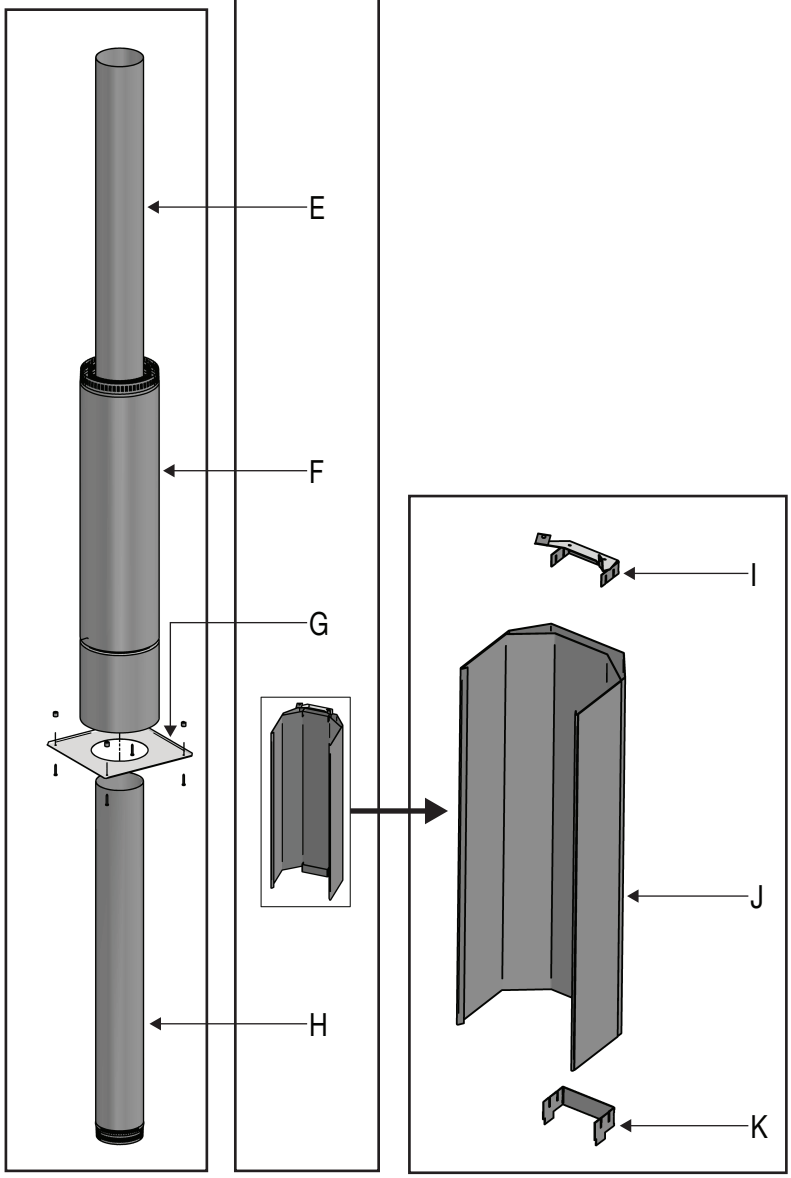

This flue kit has been tested and complies to AS/NZS 2918:2001, Appendix F test.

GDFLU019M

Free Standing Flue Kit 150 With Combination Cowl

(With 1200mm Long Outer Slip Extension & 1200 mm Long Deeper Double Flue Shield)

ROOF TERMINATION KIT 951909

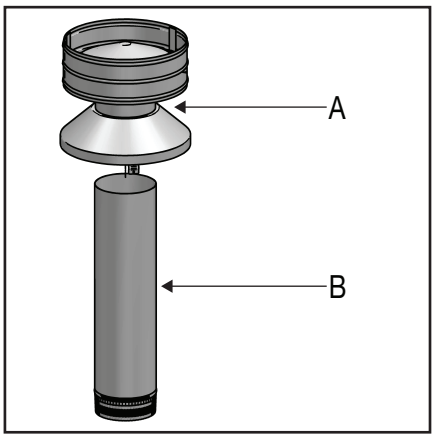

A	1 X 150 Anti Down Draft Combination	**951916**
B	1 X Flue 150mm x 600mm - 50mm to Swage, SS	**951208**
C	1 X Outer Shield Case - 1200mm OD 253mm	**951222**
D	1 X Flue 150 x 1200 -50mm to Swage- SS	**951200**
E	1 X Comb. Casing - 200/250/1200, Galv	**951903**
F	1 X Ceiling Plate 345 x 345mm SS	**951515**
G	1 X MFI Flue Shield Top Bracket	**MFI00097**
H	1 X KRM Double Flue Shield 1200mm	**KRMAC091**
I	2 X FLUE 150 x 1200 - S/S - VHT	**951252V02**
J	1 X MFI Flue Shield Bottom Bracket (Convection)	**MFI00098**
K	1 X MFI Flue Shield Bottom Bracket (Radiant)	**MFI00099**
	4 X Ceiling Plate Ceramic Spacers	**551207**
	4 X Screw 10GX1-1/2" PAN POZI ZP	**521651**
	Flue Shield Installation Instruction	**MFI00739**
	150 4.2m Free Standing Install Instruction	**591224**

STARTER PACK 951924

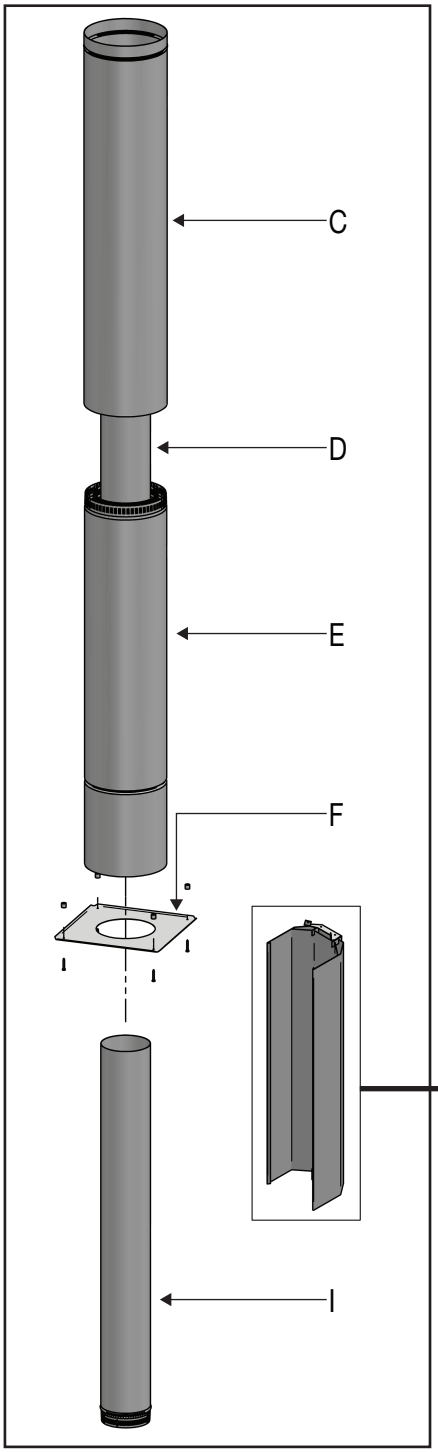

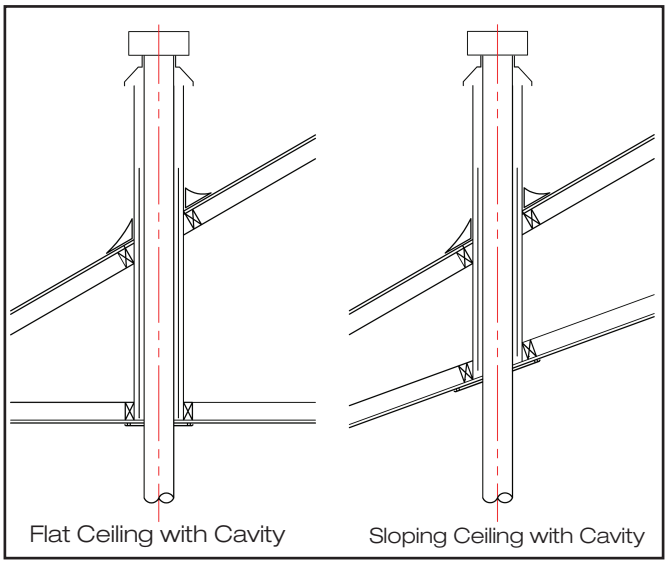

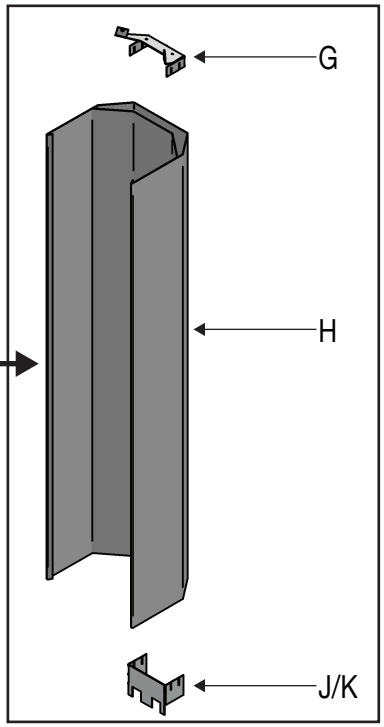

This flue kit has been tested and complies to AS/NZS 2918:2001, Appendix F test.

GDFLU021M

Zero Clearance Flue Kit 150mm with Combination Cowl

ROOF TERMINATION KIT 951458

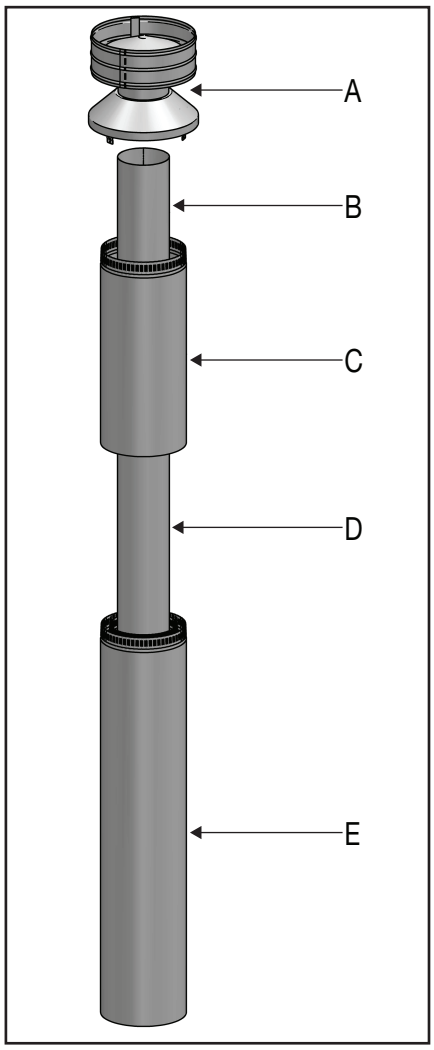

A	1 X 150 Anti Down Draft Combination Cowl	**951916**
B	1 X Flue 150mm x 600mm - 50mm to Swage, SS	**951208**
C	1 X Flue Outer Shield 253mm x 600mm, Galv.	**951205**
D	1 X Flue 150 x 1219 – 38mm to Swage, SS	**951251**
E	1 X Flue Comb. Casing -200/250/1200, Galv	**951905**
F	1 X Flue 150 x 1219 – 50mm to Swage, SS	**951200**
G	2 X Flue Comb. Casing -200/250/1200, Galv	**951905**
H	1 X Flue 150 x 1219 – 38mm to Swage, Galv	**951251**
	150mm Z/C Flue Kit Install Instruction	**591228**

FLUE 150 ZERO CLEARANCE EXT PACK 951459

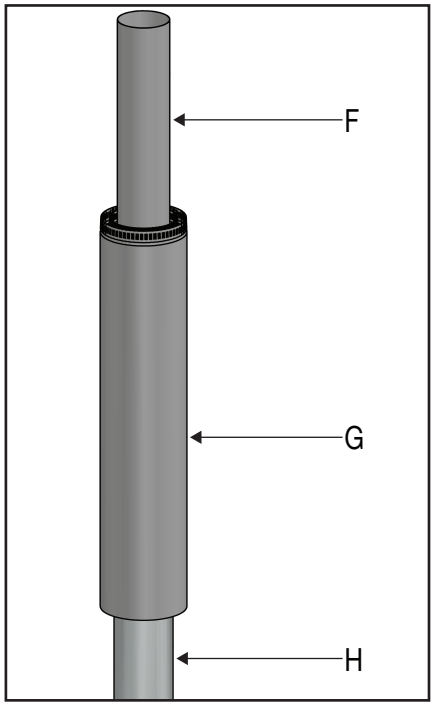

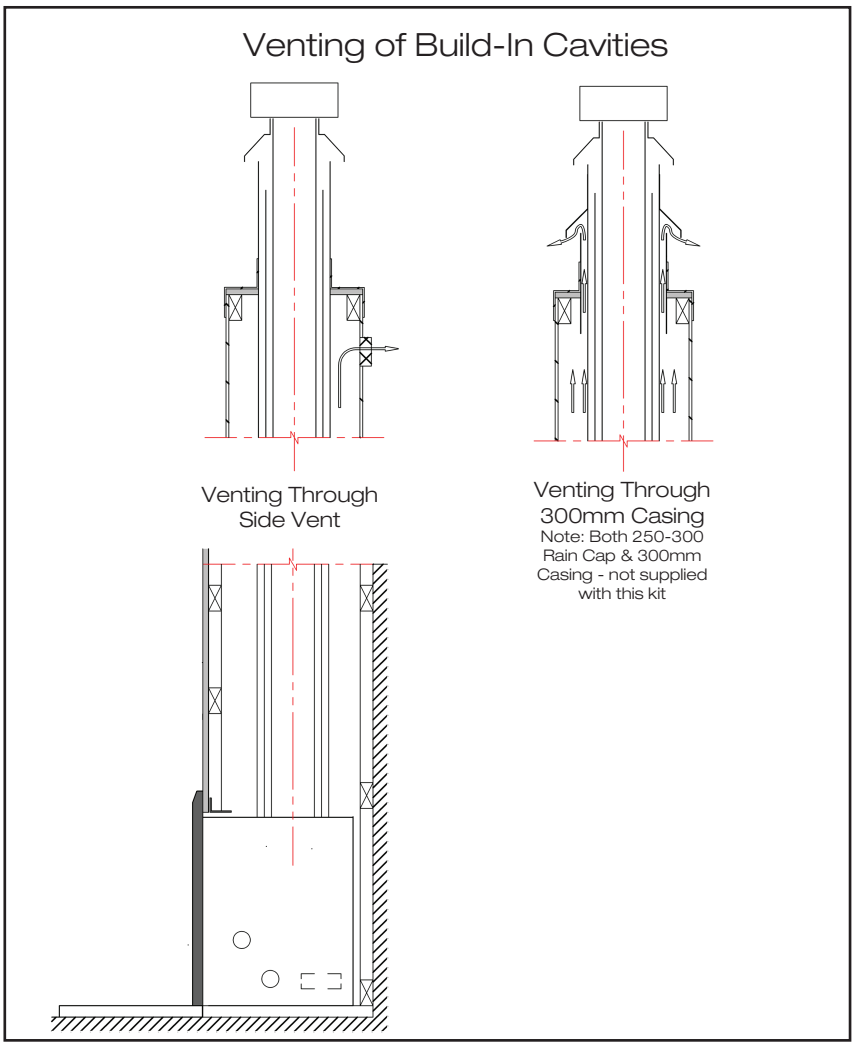

This flue kit has been tested and complies to AS/NZS 2918:2001, Appendix F test.

GDDROPBOX

150mm Drop Box for Angle Ceiling Installations

Note:
- Does not include the flue kit.
- Suitable for GDFLU012M, GDFLU013M, GDFLU018M, GDFLU019M.

A	1 X Drop Box Kit	**951930**
B	1 X 250 Drop Box Flanged Pipe	**951555**
C	1 X 250 Drop Box Air Flange	**951554**
D	1 X 250 Eco Drop Box Cover	**551538**
	4 X Casing Fixing Brackets – Galv.	**951539**
	Drop Box Kit Install Instruction	**591206**
	Order separately specifying ceiling angle	
E	1 X 250mm S/S Ceiling plate. Options Available:	
	0 Degree Ceiling Roofs	**951967**
	15 Degree Ceiling Roofs	**951935**
	30 Degree Ceiling Roofs	**951936**
	40 Degree Ceiling Roofs	**951937**
	4 X Ceiling Plate Ceramic Spacers	**551207**
	4 X Screw 10GX1-1/2" Pan Pozi ZP	**521651**

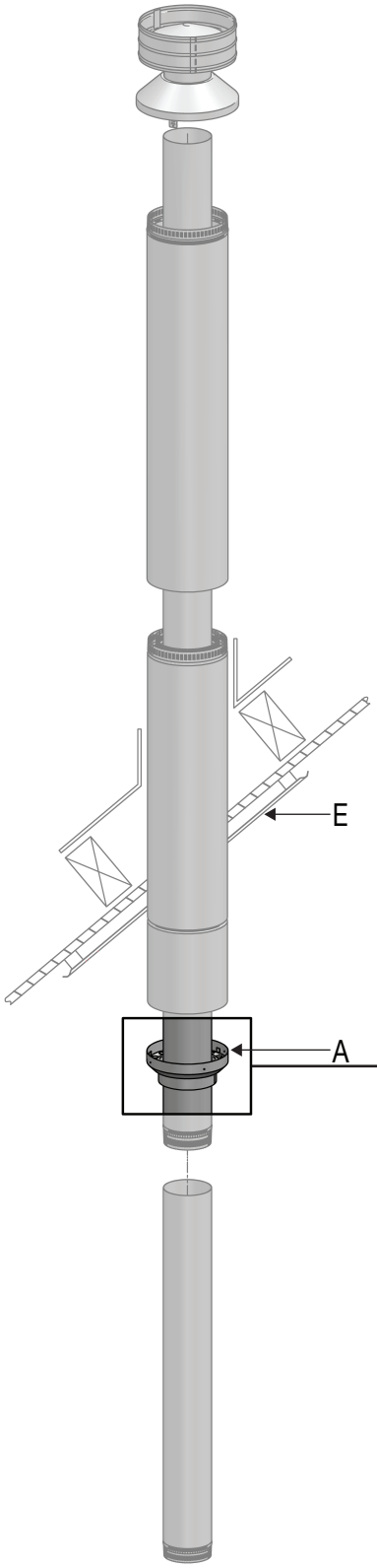

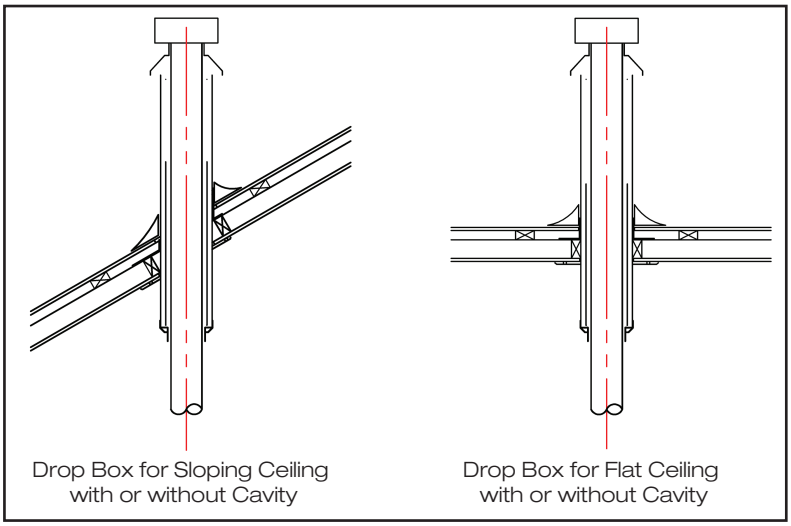

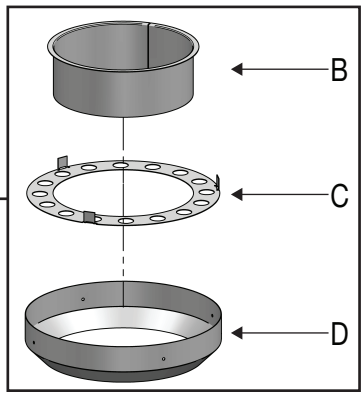

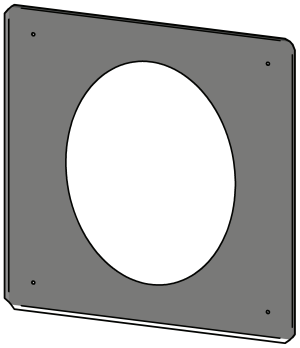

(See details on page 15)

This Drop Box has been tested and complies to AS/NZS 2918:2001, Appendix F test.

GDOPTIFLAT

150mm Opti Flue Kit Option for Flat Ceiling Installation

Note:
- Does not include flue kit.
- Suitable for GDFLU012M, GDFLU013M, GDFLU018M, GDFLU019M.
- For Mackenzie Model - attach 504 x 504 R10000 ceiling plate over the 360mm Opti Kit ceiling plate.

A	1 X Opti Box 300mm OD Pipe Assy	**951529**
B	1 X Insulation Blanket Opti Flat	**951522**
C	1 X 150 Opti Flat Flue Kit Ceiling Plate	**951520**
	4 X Screw 10GX1-1/2" Pan Pozi ZP	**521651**
	Opti Flat Kit Install Instruction	**591204**

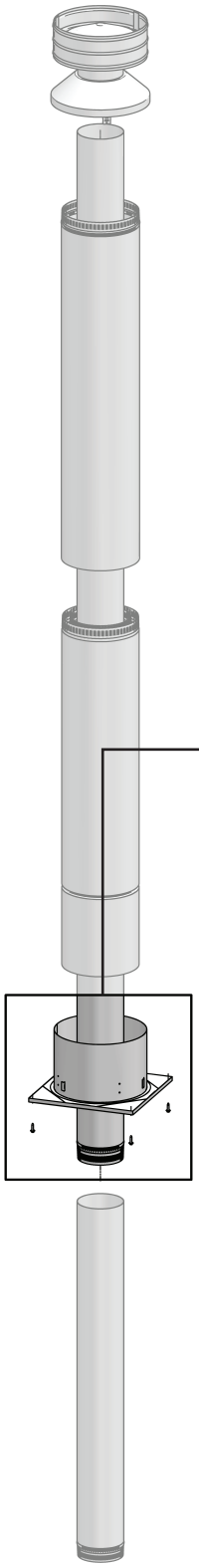

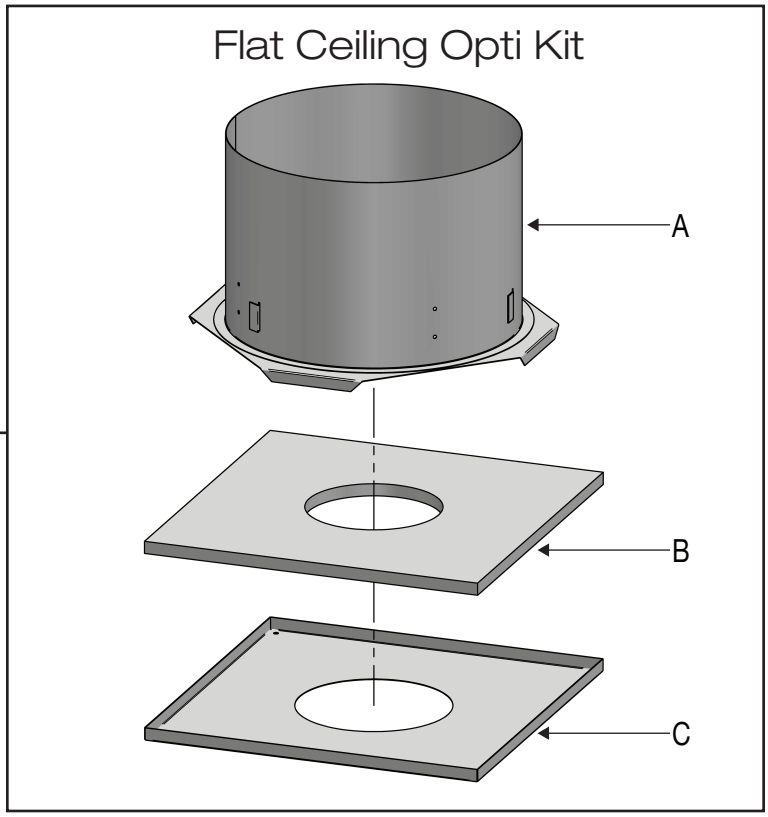

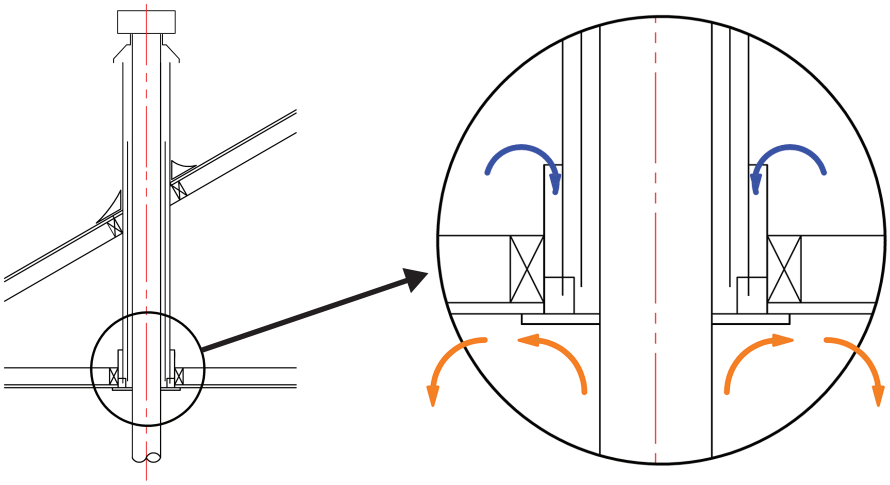

Opti option
Flat Ceiling with Cavity

This Opti flue kit has been tested and complies to AS/NZS 2918:2001, Appendix F test.

GDOPTIANGLE

150mm Opti Flue Kit Option for Angle Ceiling Installations

Note:
- Does not include the flue kit.
- Suitable for GDFLU012M, GDFLU013M, GDFLU018M, GDFLU019M.

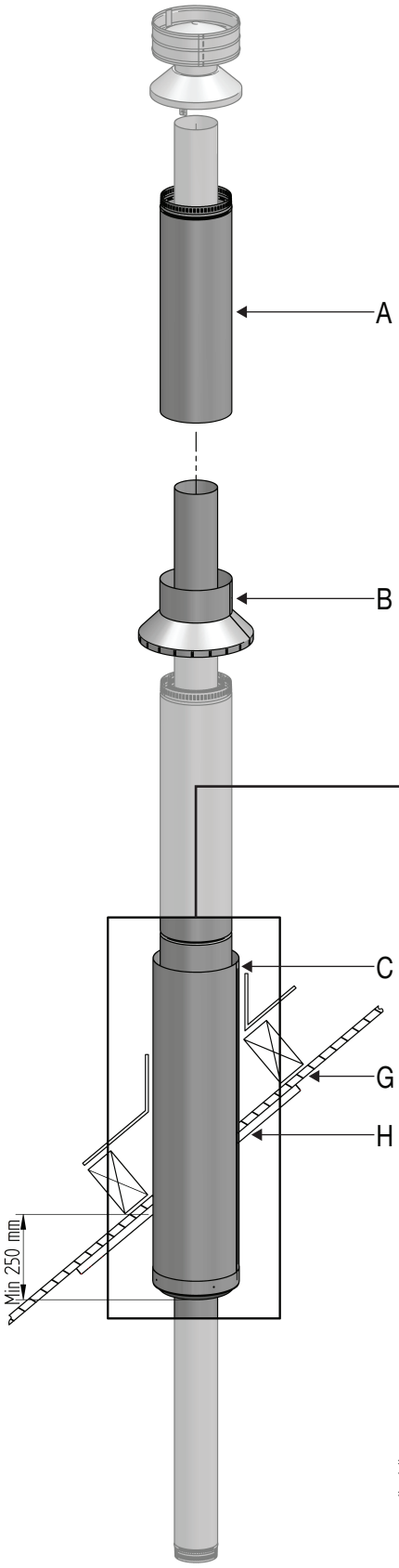

A	1 X Outer Casing 250 X 800 S/S	**951556**
B	1 X 300 Opti Angle Flashing Assy	**551552**
C	1 X 300 OD x 1200 Opti Box Pipe Assy	**951945**
D	1 X 300 OD x 800 Opti Box Pipe	**951544**
E	1 X 300 Opti Box Bracket	**951528**
F	1 X 300 Opti Box Cover	**551546**
	4 X Casing Fixing Brackets – Galv.	**951539**
	Opti Angle Kit Install Instruction	**591205**
	Order separately specifying ceiling angle	
G+H	1 X 300 Opti Ceiling Plate + Opti insulation blanket kit. Options available:	
	0 Degree Ceiling Roofs	**951965**
	15 Degree Ceiling Roofs	**951961**
	30 Degree Ceiling Roofs	**951958**
	40 Degree Ceiling Roofs	**951947**
	4 X Screw 10GX1-1/2" Pan Pozi ZP	**521651**

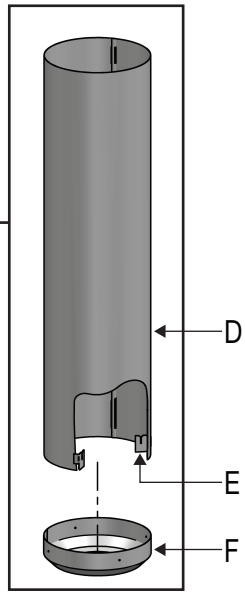

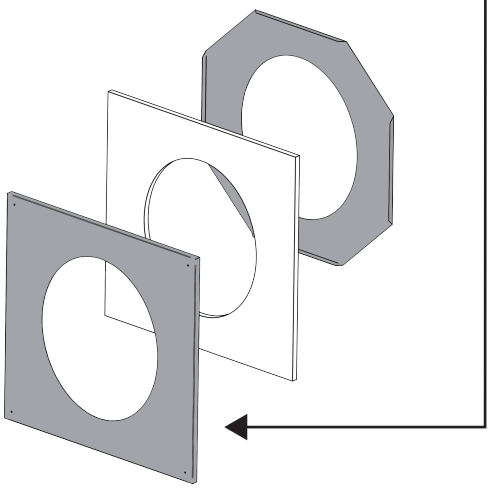

(See details on page 15)

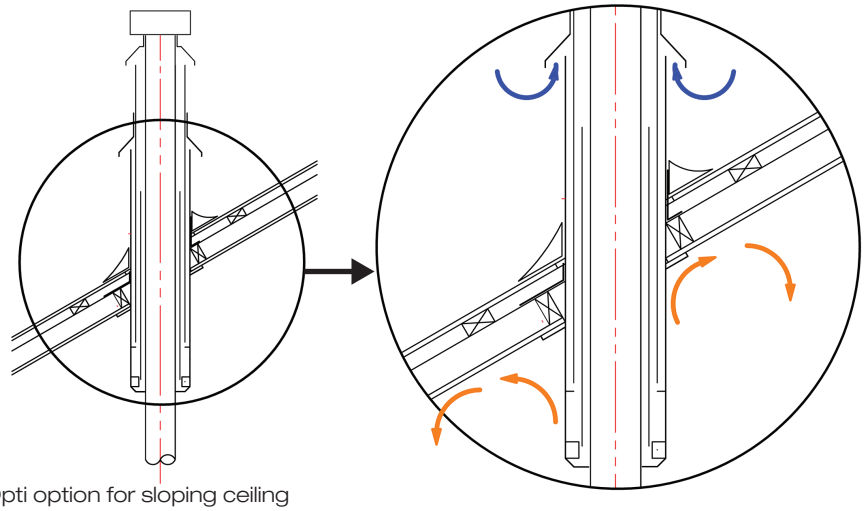

Opti option for sloping ceiling
with or without cavity

This Opti flue kit has been tested and complies to AS/NZS 2918:2001, Appendix F test.

FLU00001M

Flue Pipe 150mm x 1200mm
(SS unpainted)

FLU00003M

Flue 150mm x 1200mm
38mm to Swage, (SS-VHT Painted)

FLU00004M

Flue Outer Slip Casing Ext.
253mm x 1200mm (Galvanized)

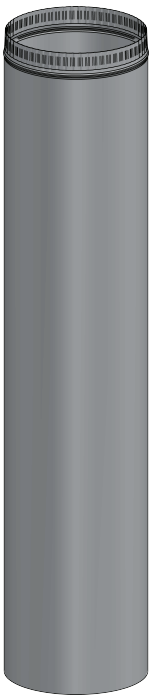

FLU00001M

200mm/250mm Inner/Outer
Combination Casing

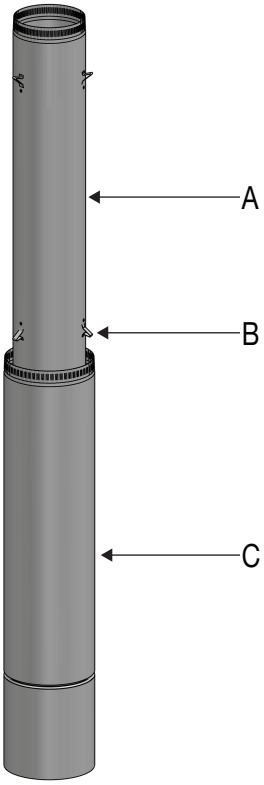

A	1 X Inner Shield 1190mm OD 200mm	**951201**
B	6 X Flue Casing Comb. Spacer 25mm S/S	**551206**
C	1 X Outer Shield 1200mm OD 250mm	**951202**
	6 X Rivet; 73 SS 5-2	**524037**

FLU00006M

Flue Extension-150mm/200mm/250mm
Combination Casing

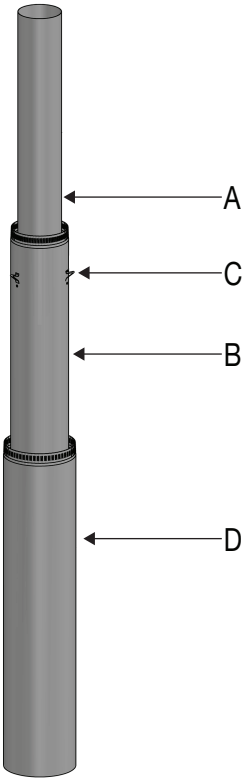

A	1 X Flue 150m X 1200mm - 50mm to Swage, SS	**951200**
	1 X Comb. Casing ZC – 200/250	**951905**
B	1 X Flue Inner Shield 1190 mm OD 200mm	**951231**
C	3 X Flue Casing Comb. Spacer 25mm S/S	**551206**
D	1 X Flue Outer Shield 1200mm OD 250mm	**951230**
	3 X Rivet; 73 SS 5-2	**524037**

951915

Stainless Steel Plate for 150mm Flue Kits

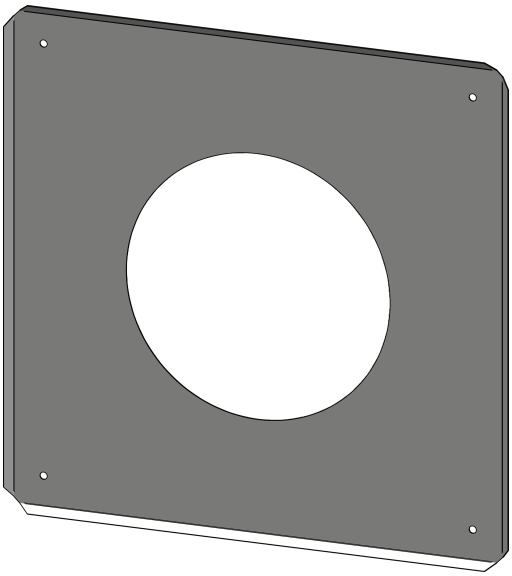

	Suitable for GDFLU012M / 13M / 18M / 19M	
	345 x 345 for 0° Ceiling	**951515**
	4 X Ceiling Plate Ceramic Spacers	**551207**
	4 X Screw 10GX1-1/2" PAN POZI ZP	**521651**

951920

Stainless Steel Ceiling Plate for GDOPTIFLAT Kit

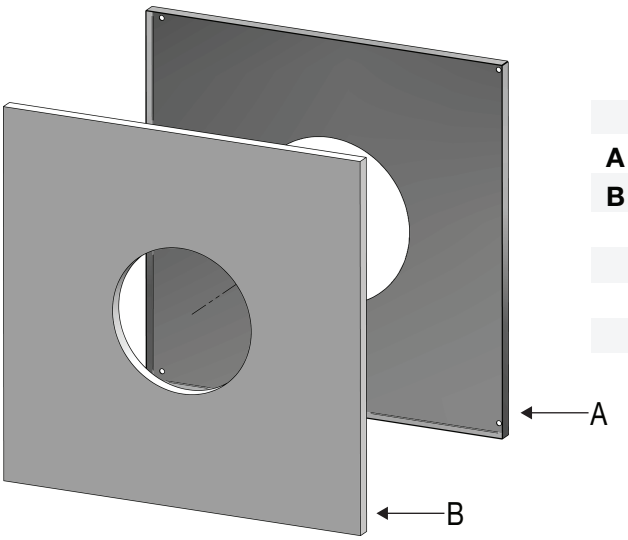

	Select depending upon ceiling angle	
A	345 x 345 for 0° Ceiling	**951520**
B	Ceramic Blanket	
	4 X Ceiling Plate Ceramic Spacers	**551207**
	4 X Screw 10GX1-1/2" PAN POZI ZP	**521651**

Stainless Steel Ceiling Plates

For GDDROPBOX Kit

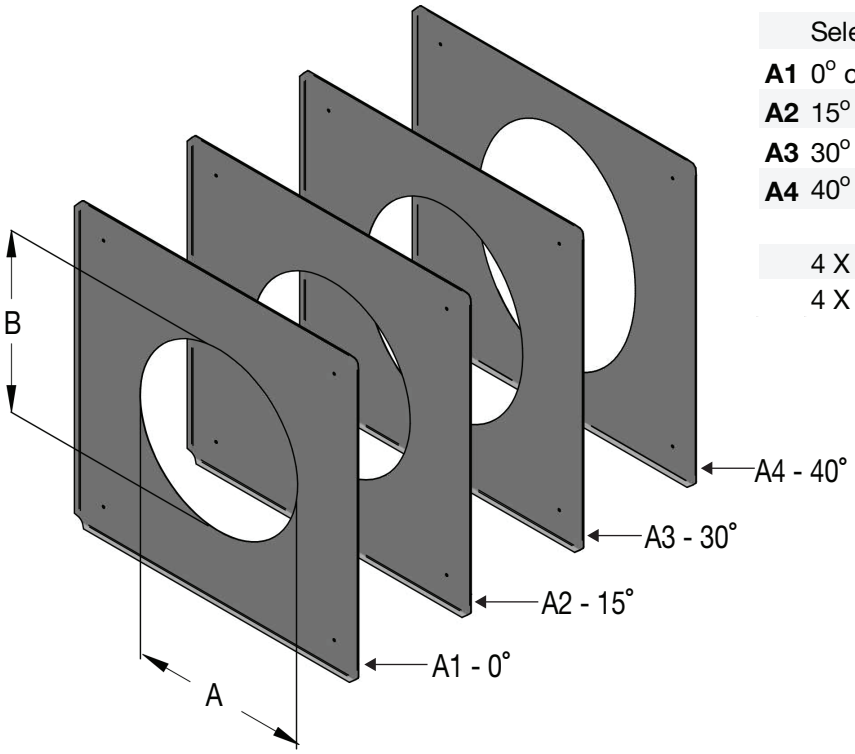

	Select depending on:	Dimension A	Dimension B	
A1	0° ceiling angle	**265**	**265**	**951967**
A2	15° ceiling angle	**265**	**275**	**951935**
A3	30° ceiling angle	**265**	**308**	**951936**
A4	40° ceiling angle	**265**	**351**	**951937**

4 X Ceiling Plate Ceramic Spacers	**551207**
4 X Screw 10GX1-1/2" PAN POZI ZP	**521651**

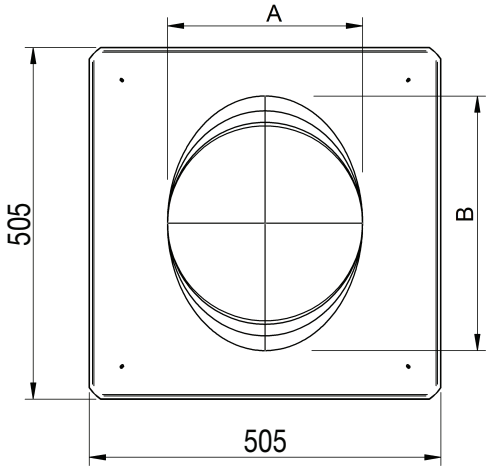

Stainless Steel Ceiling Plates

For GDOPTIANGLE

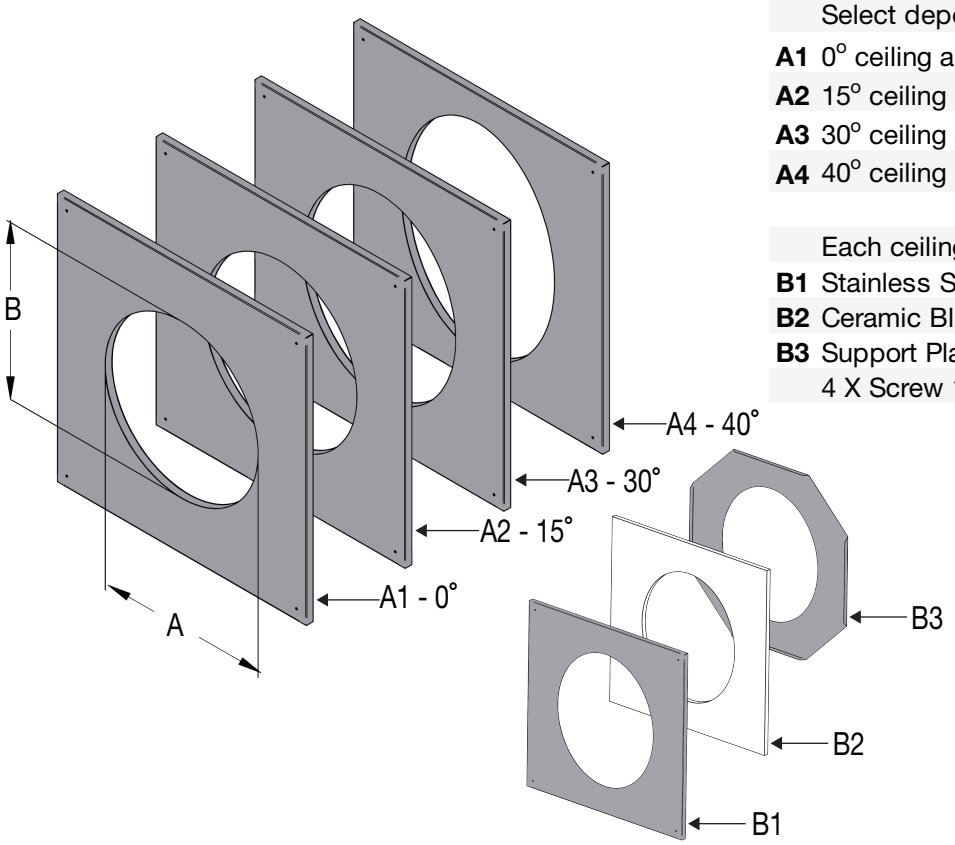

	Select depending on:	Dimension A	Dimension B	
A1	0° ceiling angle	**310**	**310**	**951965**
A2	15° ceiling angle	**310**	**321**	**951961**
A3	30° ceiling angle	**310**	**358**	**951958**
A4	40° ceiling angle	**310**	**405**	**951947**

	Each ceiling plate pack contains:	
B1	Stainless Steel Ceiling Plate	
B2	Ceramic Blanket	
B3	Support Plate	
	4 X Screw 10GX1-1/2" PAN POZI ZP	**521651**

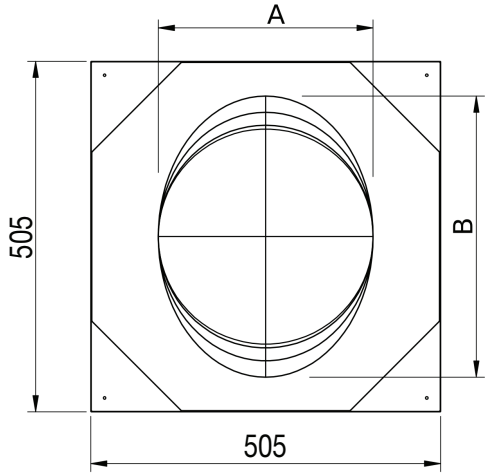

951916

150Mm ADDCC - Anti Downdrought Combination Cowl Stainless Steel

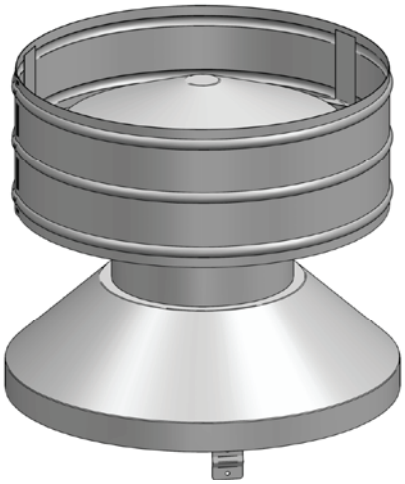

951917

150mm ADDCC - Anti Downdrought Cowl Stainless Steel

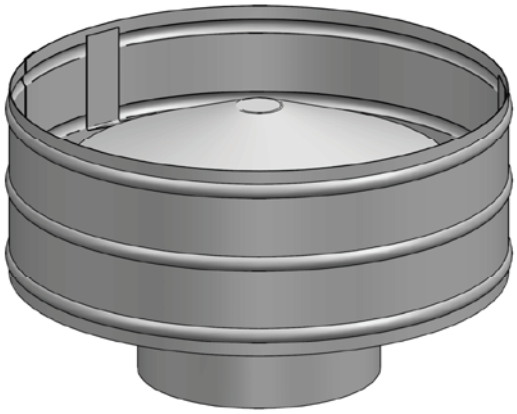

951919

150 - 250mm Casing Cover Stainless Steel

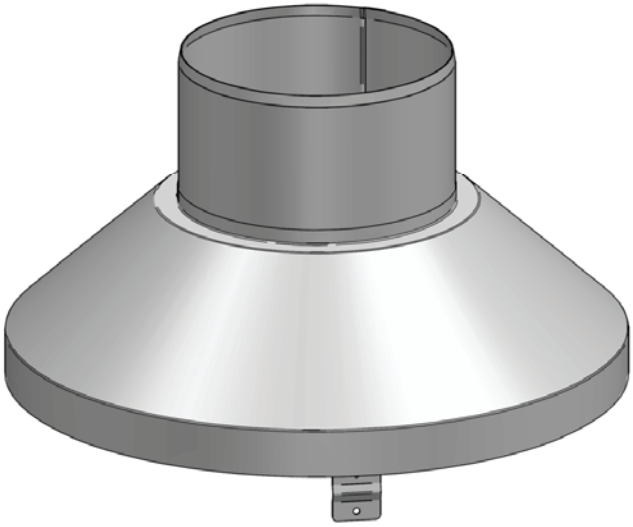

Technical Specifications
For Masport, Nectre, & Logaire Models

Steel Floor Protectors

Enhance your freestanding wood fire with a NZ made, stylish, black powder coated steel floor protector, available in a range of sizes to suit your needs.

	Parallel Floor Protector Installation				Corner Floor Protector Installation			
Size - Width x Depth (mm)	870 x 921	900 x 930	950 x 1030	1000 x 1160	1010 x 1010	1036 x 1036	1180 x 1180	1300 x 1300
Steel Thickness	4 mm	4 mm	4 mm	4 mm	4 mm	4 mm	4 mm	4 mm
Model	998908	998901	998903	998905	998902	998909	998904	998906
Akaroa	✓	✓				✓	✓	
Hestia 2		✓						
Hurunui			✓				✓	
Mackenzie				✓				✓
Osburn 1600 Dry			✓				✓	
R1200	✓	✓			✓			
R3000	✓	✓					✓	
R5000			✓				✓	
Rakaia			✓				✓	
Waimakariri			✓				✓	
Nectre N65	✓	✓				✓	✓	
Wanaka			✓				✓	

*Floor Protectors are designed and made of 4mm steel and comply to AS/NZS 2918:2001 standard.

Parallel Floor Protectors

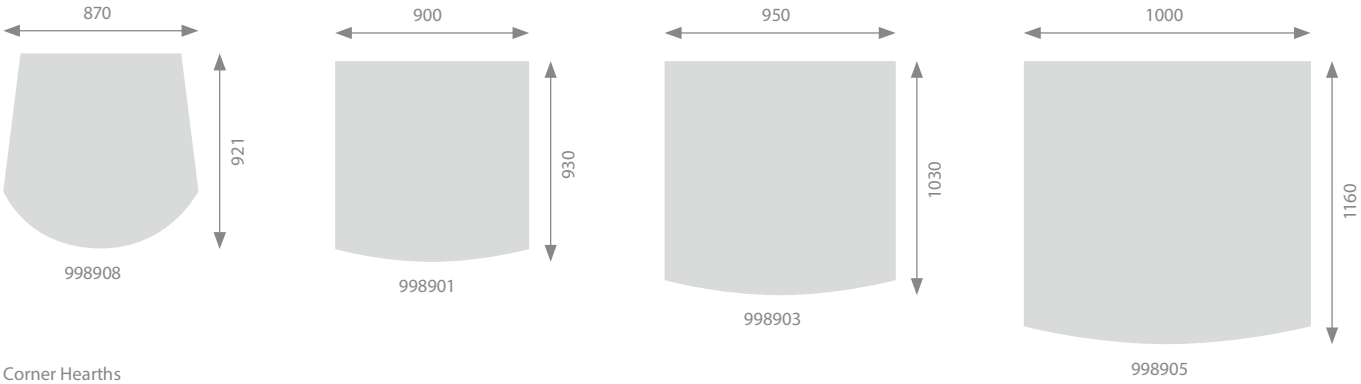

Corner Hearths

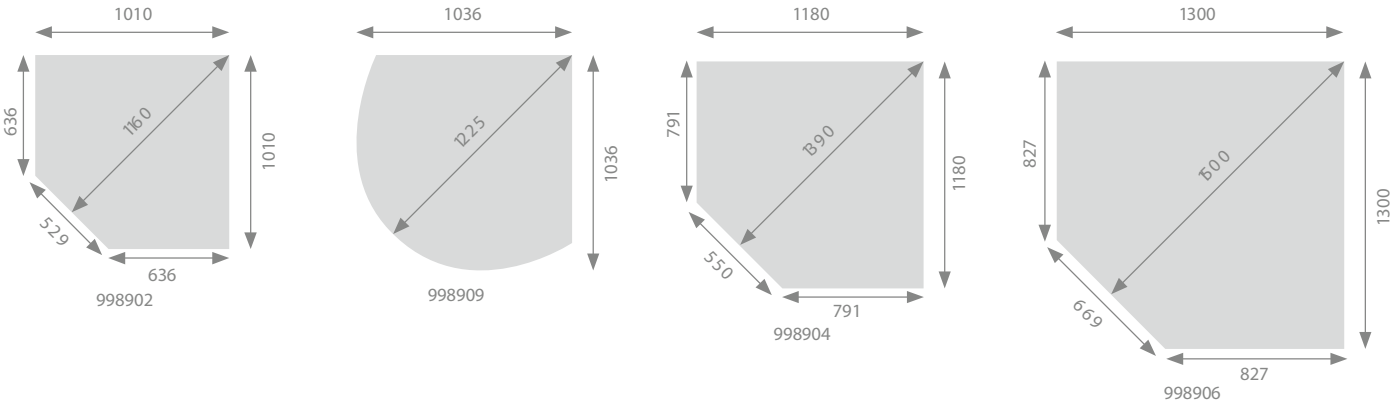

Free Standing Wood Fires
Clearance Specifications

Minimum distance to heat sensitive materials (mm) when a Masport double skin flue shield and air deflector (if required) is fitted as per Masport specifiactions

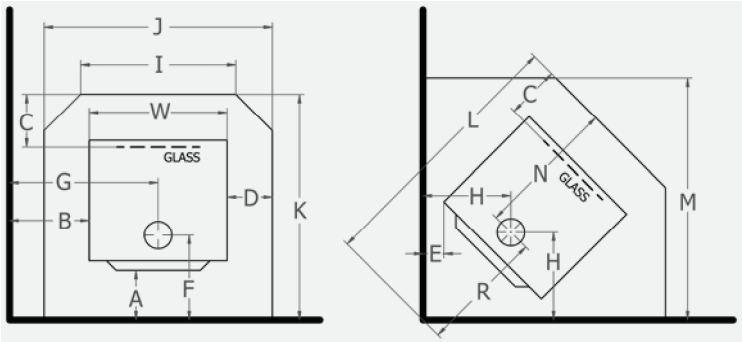

Parallel Corner

Model	Space Heat Output [1]	Type of Flue Shield	Type of Floor Protector	A	B	C	D	E	F	G	H	I	J	K	L	M	N	R	W
Akaroa	MED—LRG	MDSS	AFP	100	350	300	117	180	261	591	400	415	715	920	1236	1025	670	566	481
Hestia 2	MED—LRG	MDS	AFP	50	340	300	130	25	213	660	366	600	900	820	1125	1008	607	518	640
Hurunui / LUF3000 [2]	MED—LRG	MDSM	AFP	110	225	300	100	85	306	575	441	600	900	944	1262	1104	638	624	700
Mackenzie R10000 [2]	LRG	MDSM	AFP	150	400	300	87	160	350	795	550	664	964	1070	1498	1294	720	778	790
Osburn 1600 Dry [2]	LRG	MDS	AFP	100	360	300	81	150	300	678	483	496	796	1003	1385	1156	701	684	635
R 1200 L / P [2]	SML—MED	MDSM	AFP	100	280	300	116	100	290	527	401	425	725	888	1160	974	598	567	493
R3000 L / P / Ash / Woodstacker [2]	MED—LRG	MDSM	AFP	100	230	300	100	100	290	542	446	523	823	883	1224	1050	593	631	623
R3000 L/Ash [2]	SML—MED	MDSM	Ash	100	230	300	100	100	290	542	446	523	823	833	1224	1050	593	631	623
R5000 PED [2]	MED—LRG	MDS	Ash	128	200	300	100	85	324	550	441	600	900	968	1268	1109	644	624	700
R5000 L / P [2]	MED—LRG	MDS	AFP	128	200	300	100	85	324	550	441	600	900	968	1268	1109	644	624	700
Rakaia	MED—LRG	MDSM	AFP	100	260	300	100	100	278	610	456	600	900	1001	1367	1179	723	644	700
Waimakariri L / P / Ash	SML—MED	MDSM	AFP	100	180	300	100	100	288	492	440	522	824	958	1292	1098	670	622	623
Wanaka [2]	MED-LRG	MDS	AFP	90	285	300	100	100	305	635	464	600	900	944	1295	1128	639	656	700
Nectre N65	MED-LRG	MDSM	AFP	125	350	300	144	150	296	641	427	540	869	883	1192	1036	588	604	581
Nectre Bakers Oven	SML-MED	MDSM	IFP-12	125	350	300	100	350	260	625	640	450	750	973	1618	1303	713	905	550
Nectre Big Bakers Oven	LRG	MDSM	IFP-15	125	325	300	100	275	258	670	613	590	890	973	1582	1327	715	867	690

[1] Heat output and burn time will vary depending on fuel size, type and moisture content.
[2] These models have a cooktop ability. Please ensure cookware is used and food is not put directly on the wood fire surface. Over time cooking on your wood fire may alter the appearance, this is not covered under warranty.

Space Heat Output is only a guide based on homes with average insulation, window areas, and 2.4m ceiling heights. Differences in these factors, as well as others like, geographical location, layout of the house, living room size, type of windows all play a part in choosing the right model for your heating needs. Consult your dealer or installation contractor for more information.

Type of Fires

- Radiant Fire
- Convection Fire

Type of Flue Shields

MDS	Masport Double Skin Flue Shield 1200mm long	GDFLU012M
MDSM	Masport Double Skin Flue Shield 900mm long with special heat diverter and ceiling plate	GDFLU013M
MDSS	Masport Double Skin Flue Shield 600mm long	GDFLU018M

Type of Floor Protectors

AFP	Ash Floor Protector
IFP-12	Floor Protector with 12mm non-combustible material
IFP-15	Floor Protector with 15mm non-combustible material

Notes

- Water heating booster tubes can be fitted to Masport wood fires but the local emission regulations in some areas may preclude their use on some models.
- It is important to note that this dimension page is a guide only. Please refer to the installation manual supplied with the fire for accurate manufacturer recommendations. All details are available on www.masportheating.co.nz
- Clearances are for fire hazard only. For durability of finishes or surfaces you should contact the relevant manufacturer for their specification. Glen Dimplex New Zealand Ltd accepts no responsibility for the deterioration of surfaces or finishes.
- For full warranty details refer to your owner's manual. All heaters must be installed and serviced by an authorised installer. Due to ongoing enhancements, specifications may change without notice. Some pictures and settings are for illustration purpose only. Contact your dealer for fires available in your area.

Inbuilt Wood Fires Clearance Specifications

Dimensions and minimum floor protector sizes as per standard AS/NZS 2918:2001

Model	Space Heat Output [1]	Type	Fascia	Type of Floor Protector	**Thickness of Floor Protector**	Elevation above ground	D	H	W	F	FF	FH	FW	**HW**	**HD**
LE4000 Provincial	SML—MED	Insert	Wide	IFP-3	**> 50**	> 50	417	567	590	101	316	680	965	**935**	**345**
		Insert	Slim									700	845		
		Inbuilt	Standard				525	696	715	210	315				
I7000 ZC Rural	LRG	Ducted Built-in [2]	Standard	Ash	**N/A**	370 +	600	794	860	248	352	692	814	**1000**	**300**
				Non-Combustible Floor		0—350								**1000**	**650**
Rangitata without ash lip	SML—MED	Insert	Standard	IFP-1	**> 43**	43	510	587	630	100	410	713	870	**900**	**362**
		Inbuilt	Standard	Ash	**N/A**	Ash	607	652	770	197	410	713	870	**900**	**422**
Rangitata with ash lip	SML—MED	Insert	Standard	IFP-1	**> 33**	33	510	587	630	100	410	713	870	**900**	**362**
		Inbuilt	Standard	Ash	**N/A**	Ash	607	652	770	197	410	713	870	**900**	**362**

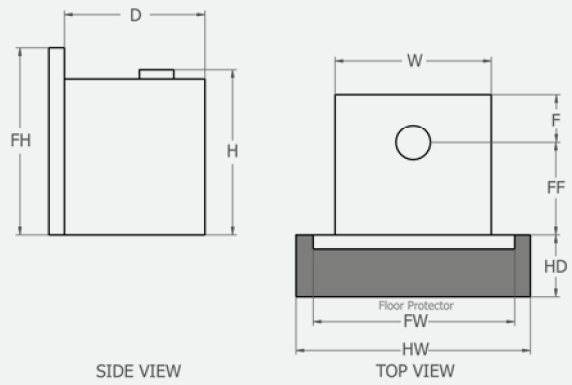

Type of Floor Protectors

IFP-1	One layer of 6mm thick PROMATECT-H & 8mm thick tiles
IFP-3	Two layers of 16mm thick MICORE 160 & one layer of 6mm fibre cement sheet & tiles
Ash	Ash Floor Protector

[1] Heat output and burn time will vary depending on fuel size, type and moisture content.
[2] For other floor protector thicknesses the HD dimension changes. See detailed install instructions.

Space Heat Output is only a guide based on homes with average insulation, window areas, and 2.4m ceiling heights. Differences in these factors, as well as others like, geographical location, layout of the house, living room size, type of windows all play a part in choosing the right model for your heating needs. Consult your dealer or installation contractor for more information.

Flue Kit Details As Per Model

Kit Code	Model	Kit Box 1	Kit Box 2	Divertor Plate	Ceiling Plate
GDFLU012M	Osburn 1600	951909	951908 1200mm Flue shield	N/A	951915 included with the **Flue Kit**
	Hestia 2 C/A			N/A	
	Wanaka			KRM00064 included with the Fire	
	R5000 PED/LEG2				
	R5000 Rural PED				
GDFLU018M	Akaroa & Akaroa WS	951922	951902 600mm Flue Shield	N/A	
GDFLU013M	R5000 WS		951910 900mm Flue Shield	983630 included with the Fire	983586 included with the Fire
	Mackenzie R10000				
	ULEB Rakaia ASH			N/A	951915 included with the **Fire**
	ULEB Hurunui			N/A	
	ULEB LUF3000			N/A	
	ULEB Waimakariri PED/LEG/ASH			N/A	
	R3000 PED/LEG/ASH/WS			N/A	
	R1200 PED/LEG			N/A	
	R3000 Rural LEG			N/A	
	N65			N/A	
GDFLU019M	Kronos Multi-Fuel	951909	951924 12mm Deep Flue Shield	KRM00064 included with the Fire	
GDFLU013M with NECTDROPBOX	Bakers Oven	951909	951910 900mm Flue Shield	N/A	N/A
	Bakers Oven Big			N/A	N/A
GDFLU001M	Rangitata Insert	GDFLU001M	N/A	N/A	N/A
	I2000 Insert				
	LE4000 Insert				
GDFLU021M	Rangitata Built-In (ZC)	951458	951459	N/A	N/A
	I3000 Built-In (ZC)				
	LE4000 Built-In (ZC)				
	I7000 Built-In Ducted (ZC)				
N/A	Matakana Insert	N/A	N/A	N/A	N/A
N/A	Matakana Built-In	N/A	N/A	N/A	N/A
GDFLU025MBK	Matakana Corten Cabinet	951925	951926	N/A	N/A

Warranty

Glen Dimplex New Zealand warranties Masport flue systems, allied parts, and paint finish, under normal use, to be free from defects in material or workmanship (from the date of purchase) for period of one year.

Installation

Please refer to the installation and operation instructions before installing your Masport Flue Kit. A full set of these instructions are supplied with each fire. Glen Dimplex New Zealand recommends that all installation work be carried out by an installer who has completed the NZHHA certification programme.

Glen Dimplex New Zealand Ltd PO Box 58473, Botany, Auckland.

Glen Dimplex New Zealand Ltd's policy is one of continuous development. We reserve the right to change size and specifications without notice.