WOOD FIRES 2026

masportheating.co.nz

Buying Guide for Masport Wood Fires

WOOD FIRES

Space Heating Output[1]	Type	Model	Options				Extras	Compliance[4]							Performance					
			PEDESTAL	LEG	ASH PAN	WOOD STACKER	WATER BOOSTER	NES	ULEB - ECan & Nelson	ECan^	BOPRC	ORC1	Hawke's Bay	Rural	Extended Burn[2]	Efficiency %	Emissions g/kg	Emissions mg/MJ	Max Avg Output kW[3]	Peak Output kW
Small | 1-2 60-100m²	LEB	R1200	✓	✓				✓		✓	✓	✓	✓	✓		66	0.49	N.A	6.9	12
Small – Medium | 2-3 Bedrooms | 100-150m²	ULEB	Clutha			✓	✓		✓	✓	✓	✓	✓	✓	✓		66	0.46	35	9.4	17
	ULEB	Kaituna	✓	✓	✓	✓		✓	✓	✓	✓	✓	✓	✓		65	0.56	33	8.7	16
	RURAL	Kaituna Rural	✓	✓	✓	✓								✓		N.A	N.A	N.A	8.7	16
	ULEB	Akaroa II			✓	✓		✓	✓	✓	✓	✓	✓	✓		67	0.47	31	9.4	16
Medium – Large 3-4 Bedrooms | 150-190m²	ULEB	Hurunui		✓	✓			✓	✓	✓	✓	✓	✓	✓	✓	65	0.55	31	10.2	19
	RURAL	Hurunui Rural		✓	✓									✓	✓	N.A	N.A	N.A	10.2	19
Large | 4+ 190-220m²	LEB	Osburn			✓		✓*	✓		✓		✓	✓	✓	✓	70	0.7	N.A	13.5	22

Key

- **ULEB** Ultra Low Emission Burner
- **LEB** Low Emission Burner
- **Rural** for properties over 2 ha
- **PED** Base with Pedestal
- **LEG** Base with Legs
- **ASH** Base with Ash Pan
- **WOOD STACKER** Base with wood storage
- **INSERT** Built-in units for masonry cavity
- **ZERO CLEARANCE** Box for timber frame/ combustible cavity
- **WATER BOOSTER** Optional retrofitable water heating pipe unit

INBUILT FIRES

Space Heating Output[1]	Type	Model	Options: INSERT	Options: ZERO CLEARANCE	Extras: WATER BOOSTER	Compliance[4]: NES	ULEB - ECan & Nelson	ECan^	BOPRC	ORC1	Hawke's Bay	Rural	Performance: Extended Burn[2]	Efficiency %	Emissions g/kg	Emissions mg/MJ	Max Avg Output kW[3]	Peak Output kW
Small – Medium 2-3 Bedrooms	ULEB	Rangitata	✓	✓		✓	✓	✓	✓	✓	✓	✓	✓	68	0.41	38	9.4	17
Large 4+ Bedrooms	RURAL	Auburn 8		✓								✓	✓	N.A	N.A	N.A	N.A	20

OUTDOOR FIRES

Type	Model	Options: INSERT	Options: ZERO CLEARANCE
Outdoor	Matakana 1200	✓	✓
Outdoor	Matakana 1200 Corten Freestanding Package		

1. Space Heat Output is only a guide based on homes with average insulation, window areas, and 2.4m ceiling heights. Differences in these factors, as well as others like, geographical location, layout of the house, living room size, type of windows all play a part in choosing the right model for your heating needs. Consult your dealer or installation contractor for more information.
2. Extended burn time: It is possible to achieve an extended burn time, when using a mixture of pine and hardwood. The burn period may vary due to factors such as moisture, density of fuel, environmental factors and how the unit is operated.
3. Maximum average output is kW output as per NES test AS/NZS 4012:2014. This kW rating reflects the real world usage of any fire and can be found on the official compliance plate on the fire.
4. Certain air sheds in these regions of New Zealand have more stringent rules than NES. Consult your Masport dealer or local council for specific rules applicable for your location.

*Conditions apply - Refer to product page for details.

Masport Heating recommends that all installation and service work of any wood fire, bakers oven or outdoor fire be carried out by an installer who has completed the certification programme authorised by New Zealand Home Heating Association (NZHHA).

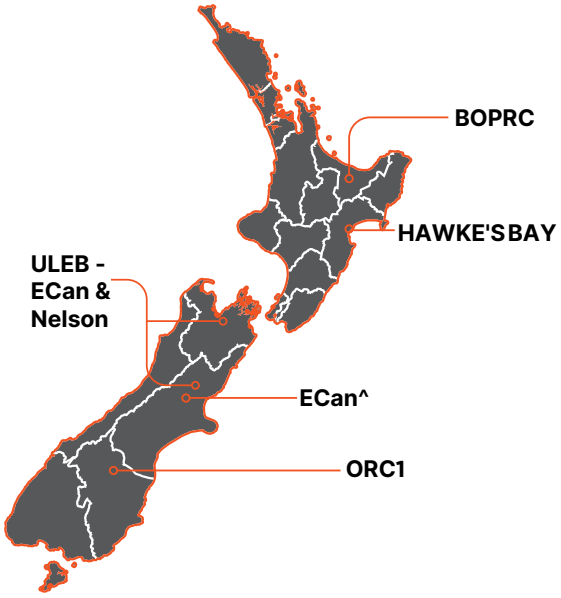

			Minimum Performance Required: Efficiency %	Emissions g/kg	Emissions mg/MJ
Ministry for the Environment	NES	Complies to National Environment Standards set by Ministry for the Environment for use in all New Zealand regions. Exception apply to some airsheds in some of the regions.	65	1.5	
Environment Canterbury Regional Council	ULEB - ECan & Nelson	Complies to the stricter Environment Canterbury & Nelson region's **ULEB emission standards which requires testing to CM1.6 method.**	65	1.5	38
Environment Canterbury Regional Council	ECan^	ECan^ - Areas of Environment Canterbury region where ULEB regulation is not applicable e.g. areas of Selwyn, Geraldine district councils and areas outside main ULEB airsheds.	65	1.0	
Bay of Plenty Regional Council	BOPRC	Complies to the more stringent Bay of Plenty Regional Council's emission standards for the Rotorua airshed.	65	0.6	
Otago Regional Council	ORC1	Complies to the more stringent Otago Regional Council's emission standards for Airshed 1 comprised of Arrowtown, Cromwell, Clyde and Alexandra.	65	0.7	
Hawke's Bay Regional Council	Hawke's Bay	Complies to the more stringent Hastings Regional Council's emission standards for the Hastings Zone 1 airshed.	65	1.0	
	Rural	Rural fires can only be installed on a section of two hectares or larger. Check with your council for clarification on local restrictions. ULEB & LEBs can be installed on rural properties.			

R1200

Radiant Fire

- Clean Air approved for NES, ECAN^ and ORC Airshed 1 regions
- 6mm steel radiant cook top
- Steel firebox for efficient burning
- Suitable for 1-2 bedrooms

Dimensions w x d x h 493 x 510 x 640 mm

10 YEARS 10 LEB LEB FIREBOX WARRANTY

^Installations limited to specific regions in Canterbury.

BASE OPTIONS

PEDESTAL LEG

Clutha

Radiant Fire

Ultra M3 TECHNOLOGY

- Clean Air approved installation for all NZ regions including ULEB - ECAN & Nelson
- Masport Ultra M3 technology - Stainless Steel baffle, Start Up Latch, Ceramic Brick
- Expansive portrait viewing window
- Suitable for 2-3 bedrooms

Dimensions w x d x h 495 x 524 x 894mm

15 YEARS 15 ULEB ULEB FIREBOX WARRANTY NON-CATALYTIC

BASE OPTIONS

ASH PAN WOOD STACKER

Kaituna

Radiant Fire

Ultra M3 TECHNOLOGY

- Clean Air approved installation for all NZ regions including ULEB - ECAN & Nelson
- Masport Ultra M3 technology - Stainless Steel baffle, Start Up Latch, Ceramic Brick
- Reduced long-term running costs
- Suitable for 2-3 bedrooms

Dimensions w x d x h 623 x 540 x 747/797*mm

15 YEARS 15 ULEB ULEB FIREBOX WARRANTY NON-CATALYTIC

BASE OPTIONS

PEDESTAL LEG ASH PAN WOOD STACKER

RURAL *Kit Available*

* Wood Stacker height

Akaroa II

Radiant Fire

Ultra M3 TECHNOLOGY

15 YEARS 15 ULEB ULEB FIREBOX WARRANTY NON-CATALYTIC

- Clean Air approved installation for all NZ regions including ULEB - ECAN & Nelson
- Masport Ultra M3 technology - Stainless Steel baffle, Start Up Latch, Ceramic Brick
- Large portrait window
- Suitable for 2-3 bedrooms

Dimensions w x d x h 482 x 537 x 1039 mm

BASE OPTIONS

ASH PAN

WOOD STACKER

Rangitata

Convection Fire

15 YEARS 15 ULEB ULEB FIREBOX WARRANTY NON-CATALYTIC

- Approved for all regions in NZ, including Canterbury (ECan CM1 testing approved)
- Durable ceramic bricks
- For masonry and timber framed (ZC) installations
- Suitable for 2-3 bedrooms

Dimensions w x d x h 870 × 713 mm (insert)
870 × 780 mm (ZC)

BASE OPTIONS

INSERT

ZERO CLEARANCE

Hurunui

Radiant Fire

Ultra M3 TECHNOLOGY

15 YEARS 15 ULEB ULEB FIREBOX WARRANTY NON-CATALYTIC

- Clean Air approved installation for all NZ regions including ULEB - ECAN & Nelson
- Masport Ultra M3 technology - Stainless Steel baffle, Start Up Latch, Ceramic Brick
- Reduced long-term running costs
- Suitable for 3-4 bedrooms

Dimensions w x d x h 700 x 594 x 760 mm

BASE OPTIONS

LEG

ASH PAN

RURAL
Kit Available

Osburn 1600

Radiant Fire

10 YEARS 10 LEB LEB FIREBOX WARRANTY

- Clean Air approved for NES, ECAN^ and ORC Airshed 1 regions
- Built-in ash pan within pedestal for easy cleaning
- 8mm flat radiant cook top
- Suitable for 4+ bedrooms

Dimensions w x d x h 635 x 677 x 743 mm

BASE OPTIONS **OPTIONAL EXTRAS**

ASH PAN

WATER BOOSTER

TECHNICAL SPECIFICATIONS

Steel Floor Protectors

Enhance your freestanding wood fire with a NZ made, stylish, black powder coated steel floor protector, available in a range of sizes to suit your needs.

	Parallel Floor Protector Installation				Corner Floor Protector Installation			
Size - Width x Depth (mm)	870 × 921	900 × 930	950 × 1030	1000 × 1160	1010 × 1010	1036 × 1036	1180 × 1180	1300 × 1300
Steel Thickness	4 mm	4 mm	4 mm	4 mm	4 mm	4 mm	4 mm	4 mm
Model	998908	998901	998903	998905	998902	998909	998904	998906
R1200	✓	✓			✓			
Clutha	✓	✓				✓	✓	
Kaituna		✓				✓	✓	
Akaroa II	✓	✓					✓	
Hurunui			✓				✓	
Osburn 1600 Dry			✓				✓	

*Floor Protectors are designed and made of 4mm steel and comply to AS/NZS 2918:2001 standard.

Parallel Floor Protectors

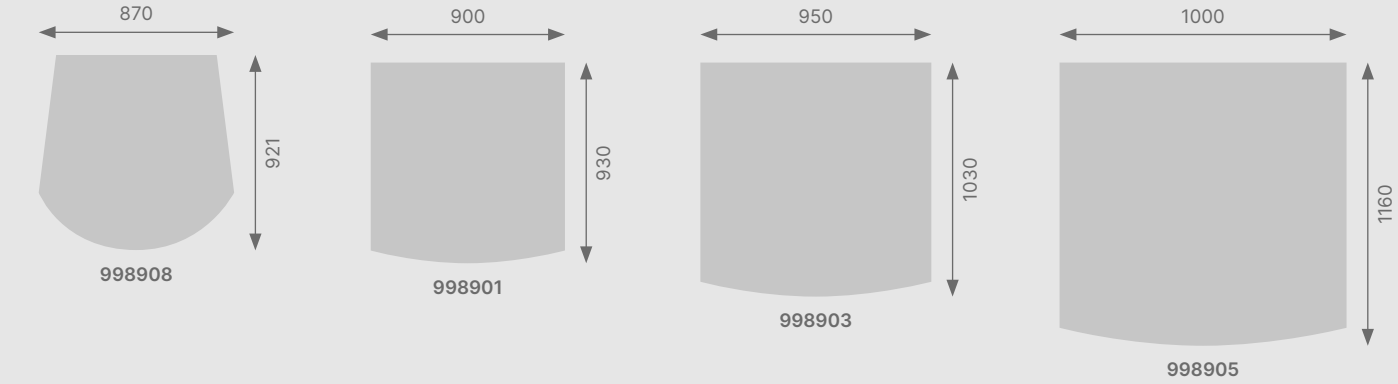

Corner Hearths

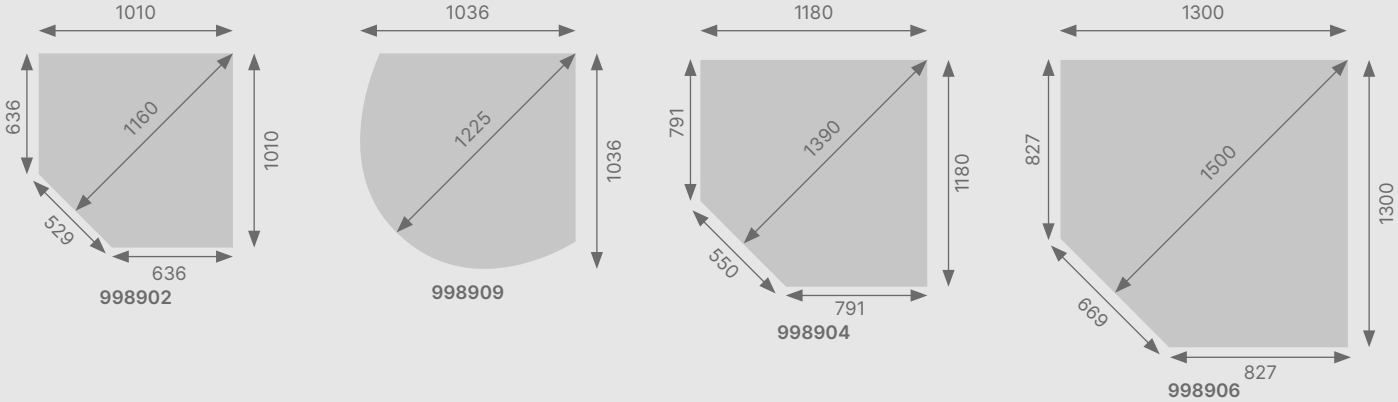

Clearance Specifications

Minimum distance to heat sensitive materials (mm) when a Masport double skin flue shield and air deflector (if required) is fitted as per Masport specifications.

Parallel

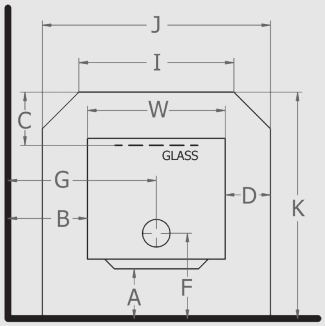

Corner

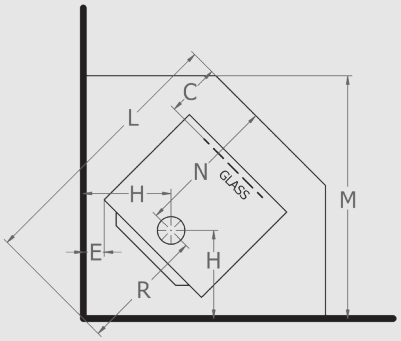

Model	Space Heat Output[1]	Type of Flue Shield	Type of Floor Protector	A	B	C	D	E	F	G	H	I	J	K	L	M	N	R	W
R1200 Leg / Ped [2,3]	SML—MED	MDSM	AFP	100	280	300	116	100	290	527	401	425	725	888	1160	974	598	567	493
Clutha [2,3] Ash / Woodstacker	SML—MED	MDSS	AFP	83	325	300	117	144	246	573	384	428	729	902	1199	998	656	543	495
Kaituna Ped/Ash/Leg/WS & Rurals	SML—MED	MDSM	AFP	79	262	300	100	88	247	573	415	522	823	862	1201	1033	614	587	623
Akaroa II [2,3] Ash / Woodstacker	SML—MED	MDSM	AFP	93	344	300	144	287	271	584	507	470	770	920	1390	1180	673	717	482
Hurunui Ash/Leg, & Rurals [2,3]	MEDL—LRG	MDSM	AFP	110	225	300	100	85	306	575	441	600	900	944	1262	1104	638	624	700
Osburn 1600 Dry [2,3] Ash / Woodstacker	LRG	MDS	AFP	100	360	300	81	150	300	678	483	496	796	1003	1385	1156	701	684	635

[1] Heat output and burn time will vary depending on fuel size, type and moisture content.
[2] These models have a cooktop ability. Please ensure cookware is used and food is not put directly on the wood fire surface. Over time cooking on your wood fire may alter the appearance, this is not covered under warranty.
[3] These models have been safety tested for ALCOVE configuration, i.e., recessed installation with walls on two sides. The ceiling height of the alcove must be 2.4m. The clearances may vary compared to the clearances shown in the above table. Refer to detailed specifications that come with the fire or Masport website.

Space Heat Output is only a guide based on homes with average insulation, window areas, and 2.4m ceiling heights. Differences in these factors, as well as others like, geographical location, layout of the house, living room size, type of windows all play a part in choosing the right model for your heating needs. Consult your dealer or installation contractor for more information.

Type of Fires

- Radiant Fire
- Convection Fire

Type of Flue Shields

MDS	Masport Double Skin Flue Shield 1200mm long	GDFLU012M
MDSM	Masport Double Skin Flue Shield 900mm long with special heat diverter and ceiling plate	GDFLU013M
MDSS	Masport Double Skin Flue Shield 600mm long	GDFLU018M

Type of Floor Protectors

AFP	Ash Floor Protector
IFP-12	Floor Protector with 12mm non-combustible material
IFP-15	Floor Protector with 15mm non-combustible material

Notes

- Water heating booster tubes can be fitted to Masport wood fires but the local emission regulations in some areas may preclude their use on some models.
- It is important to note that this dimension page is a guide only. Please refer to the installation manual supplied with the fire for accurate manufacturer recommendations. All details are available on www.masportheating.co.nz
- Clearances are for fire hazard only. For durability of surrounding wall finishes or surfaces you should contact the relevant manufacturer for their specification. Glen Dimplex New Zealand Ltd accepts no responsibility for the deterioration of surfaces or finishes.
- For full warranty details refer to your owner's manual. All heaters must be installed and serviced by an authorised installer. Due to ongoing enhancements, specifications may change without notice. Some pictures and settings are for illustration purpose only. Contact your dealer for fires available in your area.

RURAL

FREESTANDING & INBUILT

Small – Medium Home Fires

Kaituna

Radiant Fire

Ultra M3 TECHNOLOGY

15 YEARS ULEB FIREBOX WARRANTY NON-CATALYTIC

- Masport Ultra M3 technology - Stainless Steel baffle, Start Up Latch, Ceramic Brick
- Reduced long-term running costs
- Suitable for 2-3 bedrooms

Dimensions w x d x h 623 x 540 x 747/797*mm

BASE OPTIONS

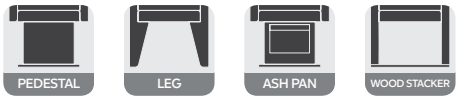

* Wood Stacker height

Hurunui

Radiant Fire

Ultra M3 TECHNOLOGY

15 YEARS ULEB FIREBOX WARRANTY NON-CATALYTIC

- Masport Ultra M3 technology - Stainless Steel baffle, Start Up Latch, Ceramic Brick
- Reduced long-term running costs
- Suitable for 3-4 bedrooms

Dimensions w x d x h 700 x 594 x 760 mm

BASE OPTIONS

Rural fires are capable of a comprehensive extended burn time,* making them an all-in-one multi-purpose appliance that offers great value for money.

Rural fires can only be installed on a section of two hectares or larger. Contact your council for clarification on local restrictions. Masport wood fires also have an extensive range of clean air wood fires, visit our website for more information.

Auburn 8

Convection Fire

10 YEARS LEB FIREBOX WARRANTY

- Single air control system allows for a steady stream of oxygen into firebox to ensure glass remains clean
- 3 speed remote fan
- For built-in applications only
- Suitable for 4+ bedrooms

Dimensions w x d x h 872 x 553 x 666mm

BASE OPTIONS

ZERO CLEARANCE

*Extended burn time: Is achievable, when using a mixture of pine and hardwood. Burn period may vary due to factors such as moisture, density of fuel, environmental factors and how the unit is operated.

Clearance Specifications

Dimensions and minimum floor protector sizes as per standard AS/NZS 2918:2001

Model	Space Heat Output[1]	Type	Fascia	Type of Floor Protector	Thickness of Floor Protector	Elevation above ground	D	H	W	F	FF	FH	FW	HW	HD
Rangitata without ash lip	SML—MED	Insert	Standard	IFP-1	> 43	43	510	587	630	100	410	713	870	900	362
		Inbuilt	Standard	Ash	N/A	Ash	607	652	770	197	410	713	870	900	422
Rangitata with ash lip	SML—MED	Insert	Standard	IFP-1	> 33	33	510	587	630	100	410	713	870	900	362
		Inbuilt	Standard	Ash	N/A	Ash	607	652	770	197	410	713	870	900	362
Auburn 8	MED-LRG	Inbuilt	Standard	Ash	N/A	245	469	648	744	207	262	666	872	1000	385
				Non-Combustible	> 100	245	469	648	744	207	262	666	872	1000	85

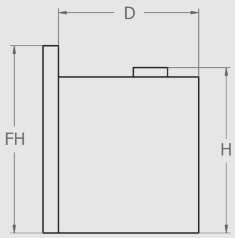

SIDE VIEW

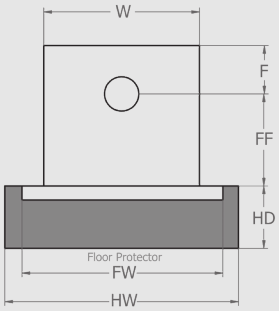

TOP VIEW

Type of Floor Protectors

IFP-1	One layer of 6mm thick PROMATECT-H & 8mm thick tiles
IFP-3	Two layers of 16mm thick MICORE 160 & one layer of 6mm fibre cement sheet & tiles
Ash	Ash Floor Protector

[1] Heat output and burn time will vary depending on fuel size, type and moisture content.
[2] For other floor protector thicknesses the HD dimension changes. See detailed install instructions.

Space Heat Output is only a guide based on homes with average insulation, window areas, and 2.4m ceiling heights. Differences in these factors, as well as others like, geographical location, layout of the house, living room size, type of windows all play a part in choosing the right model for your heating needs. Consult your dealer or installation contractor for more information.

Matakana 1200
INSERT

- Stainless steel runners for 6 cooking heights
- Removable spark guard door
- Stainless steel weather shield for protection against the elements
- In-built pizza oven
- Cast iron hot plate and grill
- Storage area for cooking tray
- Free accessories: Pizza paddle & Heat resistant gloves
- Suitable for masonry and timber framed Zero Clearance (ZC) recessed installations

Construction	4-5 mm thick steel and 3mm Stainless Steel
Dimensions (Insert) w x h x d	1412 × 793 × 628 mm (ZC) 1310 × 787 × 468* mm (masonry) *508mm including weather cover

Removable Spark Guard Door

Stainless Steel Adjustable Cook Tray

Cast Iron Cooking Plate and Grill

Cooking Tray Storage Area

Pizza Oven with 3x Pizza Stones

Matakana 1200
FREESTANDING

- Heavy-duty and robust cabinet construction
- Easy, hassle-free installation
- Convenient wood storage
- Suitable for both urban & rural outdoor settings including coastal areas

Included within pack:

- Matakana outdoor firebox
- Corten cabinet^
- Weather shield cover
- Spark guard door
- Cast-iron cooking grill and plate
- Pizza paddle
- Heat resistant gloves
- Stainless Steel, Painted Flue Kit (Optional)

Construction	
Cabinet	3mm thick Corten Steel
Flue Kit	Stainless Steel
Dimensions w x h x d	Cabinet — 1506 x 656 x 1835/1905mm* (*up to spigot)

*Refer to the owner manual for detailed terms and conditions of the product warranty.

^Please Note: Corten cabinet comes as a flat pack and requires assembly. Also, natural weathering is needed to achieve a rusted patina. Refer to installation manual for assembly instructions, clearances to combustibles, and weathering process of corten panels.

5 YEARS 5 OUTDOOR FIREBOX WARRANTY

Future proofing with Masport wood fires

At Masport Heating, we want to do what is right for the environment. Whether it is using energy more efficiently or improving our air quality, we want a cleaner, greener Aotearoa.

Our new Ultra Low Emission Burners (ULEBs) are engineered to do just that.

Masport, using its vast experience and resources, is committed to developing and exploring different combustion techniques to deliver ULEBs based on and around the new real-life test, and fuel sourced from your local wood merchant.

As New Zealand continues to refine regulations to protect our natural environment, the Masport ULEBs are designed to exceed the most stringent air quality emission standards whilst giving a longer burn periods seen in some conventional wood fires currently available in the market.

Ultra M3 TECHNOLOGY

Producing a cleaner, better Fire

Ultra M3 technology incorporates a fusion of 3 key features to elevate the performance, clean burning, safety and lower maintenance costs.

Masport M3 Box Baffle

The Ultra M3 design outperforms traditional baffles, ensuring cleaner burns. By superheating secondary air in the firebox, it achieves ultra-clean combustion. Constructed from Stainless Steel, Masport M3 Box Baffles are more durable, reducing the need for frequent replacements and lowering running costs. They are also less prone to environmental issues.

Masport M3 Starter Latch

The Masport M3 Starter latch is a simple yet effective safety solution that enhances fire operation. By allowing the door to be positioned slightly ajar, it facilitates easy ignition by allowing air to enter the firebox. It also ensures better ventilation when the fire is not in use

Masport M3 Ceramic Brick

Featuring a higher thermal mass, Masport M3 Ceramic Bricks release stored heat towards the end of the burn cycle, ensuring more consistent heat output. They are also more resilient, resulting in longer lifespan and reduced replacement needs.

The choice is easy

Cleaner air, lower operating costs, more comfortable rooms, and all with an extended burn. Made in New Zealand and suitable for all regions, we believe Masport ULEBs are the future of wood fires.

Future proof your purchase to protect the New Zealand natural environment.

As a sign of our commitment to quality, all new Masport fire boxes come with generous warranties.

Masport warranties our fire boxes, under normal use, to be free from defects in materials or workmanship (from the date of purchase)*:

- Non-Catalytic ULEB Wood Fires - 15 years
- LEB Wood Fires - 10 years
- Outdoor Wood Fires - 5 years

This applies to only the firebox and excludes operational consumables, such as bricks, baffles and air bars etc.

Masport holds operational spare parts for up to 15 years for all low emissions and ultra low emission burners, from the last date of manufacture. This gives you peace of mind and knowledge that you can service your wood fire over its lifetime.

Installation

When installed in the correct manner as shown in the Masport Heating Installation Manual (supplied with the fire), your fire will provide a cleaner and more energy efficient warmth. Likewise, your outdoor fire will provide an impressive focal point in your back yard for many years of entertainment with friends & family. Masport Heating recommends that all installation work be carried out by an installer who has completed the NZHHA certification programme. We recommend that your Masport Fire is installed with an approved Masport flue kit.

Glen Dimplex New Zealand Ltd PO Box 58473, Botany, Auckland

Glen Dimplex New Zealand Ltd's policy is one of continuous development. We reserve the right to change size and specifications without notice. For confirmation of Masport Heating product details please refer to www.masportheating.co.nz. Please refer to the installation and operation instructions before having your Masport Wood Fire installed. A full set of these instructions is supplied with each fire.